SIEMENS

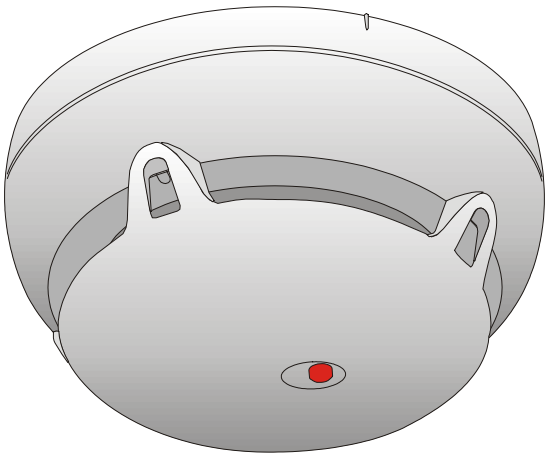

FDOOTC241

Neural fire detector

Technical manual

Building Technologies

Fire Safety & Security Products

Technical specifications and availability subject to change without notice.

© 2008-2010 Copyright Siemens Industry, Inc.

We reserve all rights in this document and in the subject thereof. By acceptance of the document the recipient acknowledges these rights and undertakes not to publish the document nor the subject thereof in full or in part, nor to make them available to any third party without our prior express written authorization, nor to use it for any purpose other than for which it was delivered to him.

Table of contents

1 About this document 7

2 Safety 11

2.1 Safety notices 11

2.2 Safety regulations for the method of operation 13

2.3 Standards and directives complied with 15

2.4 Release Notes 15

3 Structure and function 16

3.1 Overview 16

3.1.1 Features of fire detection functionality 18

3.1.2 Features of the Technical CO Alarm 20

3.1.3 Features of the Technical Ambient Supervision Alarm 22

3.1.4 Details for ordering 22

3.2 Setup 23

3.3 Function 25

3.3.1 Parameter sets for fire 25

3.3.2 Danger levels for fire 26

3.3.3 Parameter sets for CO 26

3.3.4 Warning levels for CO 27

3.3.5 Diagnosis levels 27

3.3.6 Line separator 29

3.3.7 Internal alarm indicator 29

3.3.8 Connection for external alarm indicators 29

3.3.9 Renovation mode 29

3.3.10 Test mode 30

3.3.11 Behavior in degraded mode 31

3.3.12 Interface to service devices 32

3.3.13 Line tester 32

3.4 Mechanical setup 33

3.5 Compatibility 33

3.6 Accessories 34

3.6.1 Addressable detector base FDB221/FDB221-AA 34

3.6.2 Flat, addressable detector base FDB222 34

3.6.3 Addressed sounder base FDSB291 35

3.6.4 Base attachment FDB291 35

3.6.5 Base attachment humid FDB293 35

3.6.6 Detector heating unit FDBH291 36

3.6.7 Designation plate FDBZ291 36

3.6.8 Designation plate DBZ1193A 36

3.6.9 Detector locking device FDBZ293 37

3.6.10 Dummy detector FDX291 37

3.6.11 Detector dust cap FDZ291 37

3.6.12 Protective cage DBZ1194 38

3.6.13 EMC-protective cage FDBZ294 38

3.6.14 Micro terminal DBZ1190-AA 39

3.6.15 Connection terminal DBZ1190-AB 39

3.6.16 M20 x 1.5 metal cable gland 39

4 Planning 40
4.1 Fire detection 40
4.1.1 Ambient features 40
4.1.2 Parameter sets: Sensor mode 0 'neural fire detector' 41
4.1.2.1 Description 41
4.1.2.2 Application 43
4.1.2.3 Specification 44
4.1.3 Parameter sets: Sensor mode 1 'heat detector' 45
4.1.4 Parameter sets: Sensor mode 2 'smoke detector' 45
4.1.4.1 Application 46
4.1.5 Default settings 46
4.1.6 Application examples 47
4.2 Technical CO alarm 47
4.2.1 Ambient features 48
4.2.2 Parameter sets: Sensor mode 0 'Technical CO alarm' 49
4.2.2.1 Description 49
4.2.2.2 Application 50
4.2.2.3 Specification 51
4.2.3 Default settings 52
4.2.4 Application examples 52
4.3 Technical Ambient Supervision Alarm 53
4.3.1 Ambient features 53
4.3.1.1 Temperature monitoring 54
4.3.1.2 CO monitoring 55
4.3.2 Configuration 55
4.3.3 Default settings 56
5 Mounting / Installation 57
5.1 Required space 57
5.2 Addressable detector base FDB221 58
5.3 Flat detector base FDB222 59
5.4 Base attachment FDB291 60
5.5 Base attachment humid FDB293 61
5.6 Detector locking device FDBZ293 62
5.7 Designation plate FDBZ291 63
5.8 Designation plate DBZ1193A 63
5.9 Detector heating unit FDBH291 64
5.9.1 Installation of the detector heating unit 64
5.9.2 Connection of the detector heating unit 65
5.10 Protective cages 65
5.10.1 Installation of the protective cages 66
5.10.2 Grounding of the EMC-protective cage FDBZ294 66
5.11 Cable entry 67
5.11.1 Auxiliary terminals DBZ1190-AA/-AB 68
5.12 Detector lines 69
5.12.1 Connection diagram 69
5.12.1.1 Use of unshielded cables 69
5.12.1.2 Use of shielded cables 70
5.13 Detector dust cap FDZ291 72

6 Commissioning 73
6.1 'Technical Ambient Supervision Alarm' performance check 73

7 Maintenance / Repair 74
7.1 Status polling with the detector exchanger and tester 74
7.2 Performance check 74
7.3 Testing detectors 75
7.3.1 Testing the fire detection functionality 75
7.3.2 Testing the functionality of the 'Technical CO Alarm' 76
7.3.3 Testing the functionality of the 'Technical Ambient Supervision Alarm' 76
7.3.4 Testing detectors with detector exchanger and tester 77
7.3.5 Testing detectors without detector exchanger and tester 77

8 Specifications 78
8.1 Technical data 78
8.2 Dimensions 80
8.3 Environmental compatibility 80

9 Index 81

1 About this document

Goal and purpose

This document contains information on the neural fire detector FDOOTC241. Consistent compliance with the instructions guarantees correct and safe use.

Target groups

The information in this document is intended for the following target groups:

Target group	Activity	Qualification
Product Manager	● Is responsible for information passing between the manufacturer and regional company. ● Coordinates the flow of information between the individual groups of people involved in a project.	● Has obtained suitable specialist training for the function and for the products. ● Has attended the training courses for Product Managers.
Project Manager	● Coordinates the deployment of all persons and resources involved in the project according to the schedule. ● Provides the information required to run the project.	● Has obtained suitable specialist training for the function and for the products. ● Has attended the training courses for Project Managers.
Project Engineer	● Parameterizes the product according to country-specific and customer-specific requirements. ● Checks operability and releases the product for commissioning at the place of installation. ● Searches for and corrects malfunctions.	● Has obtained suitable specialist training for the function and for the products. ● Has attended the training courses for Project Engineers.
Installation personnel	● Assembles and installs the product components at the place of installation. ● Carries out a performance check following installation.	● Has received specialist training in the area of building installation technology or electrical installations.
Maintenance personnel	● Carries out all maintenance work. ● Checks that the products are in perfect working order. ● Searches for and corrects malfunctions.	● Has obtained suitable specialist training for the function and for the products.

Reference document and source language

- The source language of this document is German (de).
- The reference version of this document is the international version in English. The international version is not localized.

The reference document has the following designation:

ID_x_en_--

x = modification index, en = English, -- = international

Document identification

Position	Information
Title page	● Product type ● Product designation ● Document type
Footers	● Document ID – ID_ModificationIndex_Language_COUNTRY ● Edition date
Last page	● Document ID ● Edition date ● Manual (product line) ● Register (table of contents for whole documentation, folder register)

Conventions for text marking

Markups

Special markups are shown in this document as follows:

▷	Requirement for a behavior instruction
⇨	Intermediate result of a behavior instruction
⇨	End result of a behavior instruction
'Text'	Quotation, reproduced identically
<Key>	Identification of keys

Supplementary information and tips

The 'i' symbol identifies supplementary information and tips for an easier way of working, for example.

Technical terms

Term	Explanation
ASA	Advanced Signal Analysis
CO	Carbon monoxide
DA	Detection algorithms
ES	Product version
FDnet	Addressed detector line (field device net)
FDOOT	Fire detectors like FDOOTC241, but without a CO sensor and its special CO functionality
LED	Light-emitting diode
MAK value	Maximum concentration at the workplace, i.e. maximum permissible concentration of a toxic substance in the air at the workplace
MC link	Maintenance and Commissioning Link; interface to the detector exchanger and tester
S-LINE	Fire detector for sophisticated applications

Applicable documents

Document ID	Title
008331	List of compatibility (for 'Sinteso' product line)
007227	FDUD292 detector exchanger and tester
009718	FDUD293 intelligent detector tester
008250	FDUL221 line tester
008115	Installation of FDBH291 detector heating unit
010030	Fire detector application guideline
A6V10208552	Installation of detector locking device FDBZ293
A6V10208550	Installation of base attachment humid FDB293
A6V10208546	Installation of detector base FDB221/FDB221-AA, FDB222, base attachment FDB291, designation plate FDBZ291, dummy detector FDX291

History of changes

The reference document's modification index applies to all languages into which the reference document is translated.

The first edition of a language version or a country variant may for example have the modification index "d" instead of "a" if the reference document already has this modification index.

The table below shows this document's history of changes:

Modification index	Edition date	Brief description
f	02.2010	Addition of 'Technical Ambient Supervision Alarm' mode. References to FS20 market packages removed.
e	10.2009	Changes to the 'heat detector' parameter sets.
d	04.2009	VdS approval and CPD no. added. Editorial changes to accessories.
c	02.2009	Changes to the 'heat detector' parameter sets. Changes to the 'Robust EU1' and 'Static 60' parameter sets incorporated.
b	01.2009	Technical CO alarm added.
a	06.2008	First edition

The table below shows the published language versions with the corresponding modification index:

Modification index	en_--	de_--	fr_--	it_--	es_--
f	X	X	X	X	X
e	X	X	–	–	–
d	X	X	–	–	–
c	X	X	–	–	–
b	X	X	–	–	–
a	X	X	X	X	X

X = published

– = no publication with this modification index

2 Safety

2.1 Safety notices

The safety notices must be observed in order to protect people and property.

The safety notices in this document contain the following elements:

- Symbol for danger
- Signal word
- Nature and origin of the danger
- Consequences if the danger occurs
- Measures or prohibitions for danger avoidance

Symbol for danger

	This is the symbol for danger. It warns of **risks of injury**. Follow all measures identified by this symbol to avoid injury or death.

Additional danger symbols

These symbols indicate general dangers, the type of danger or possible consequences, measures and prohibitions, examples of which are shown in the following table:

General danger

Explosive atmosphere

Voltage/electric shock

Laser light

Battery

Heat

Signal word

The signal word classifies the danger as defined in the following table:

Signal word	Danger level
DANGER	DANGER identifies a dangerous situation, which **will result directly in death or serious injury** if you do not avoid this situation.
WARNING	WARNING identifies a dangerous situation, which **may result in death or serious injury** if you do not avoid this situation.
CAUTION	CAUTION identifies a dangerous situation, which **could result in slight to moderately serious injury** if you do not avoid this situation.
NOTICE	*NOTICE* identifies possible damage to property that may result from non-observance.

How risk of injury of presented

Information about the risk of injury is shown as follows:

⚠ WARNING
Nature and origin of the danger Consequences if the danger occurs ● Measures / prohibitions for danger avoidance

How possible damage to property is presented

Information about possible damage to property is shown as follows:

NOTICE
Nature and origin of the danger Consequences if the danger occurs ● Measures / prohibitions for danger avoidance

2.2 Safety regulations for the method of operation

National standards, regulations and legislation

Siemens products are developed and produced in compliance with the relevant European and international safety standards. Should additional national or local safety standards or legislation concerning the planning, assembly, installation, operation or disposal of the product apply at the place of operation, then these must also be taken into account together with the safety regulations in the product documentation.

Electrical installations

⚠ WARNING

Electrical voltage

Electric shock

- Work on electrical installations may only be carried out by qualified electricians or by instructed persons working under the guidance and supervision of a qualified electrician, in accordance with the electrotechnical regulations.

- Wherever possible disconnect products from the power supply when carrying out commissioning, maintenance or repair work on them.
- Lock volt-free areas to prevent them being switched back on again by mistake.
- Label the connection terminals with external external voltage using a 'DANGER External voltage' sign.
- Route mains connections to products separately and fuse them with their own, clearly marked fuse.
- Fit an easily accessible disconnecting device in accordance with IEC 60950-1 outside the installation.
- Produce earthing as stated in local safety regulations.

Assembly, installation, commissioning and maintenance

- If you require tools such as a ladder, these must be safe and must be intended for the work in hand.
- When starting the fire control panel ensure that unstable conditions cannot arise.
- Ensure that all points listed in the 'Testing the product operability' section below are observed.
- You may only set controls to normal function when the product operability has been completely tested and the system has been handed over to the customer.

Testing the product operability

- Prevent the remote transmission from triggering erroneously.
- If testing building installations or activating devices from third-party companies, you must collaborate with the people appointed.
- The activation of fire control installations for test purposes must not cause injury to anyone or damage to the building installations. The following instructions must be observed:
  - Use the correct potential for activation; this is generally the potential of the building installation.
  - Only check controls up to the interface (relay with blocking option).
  - Make sure that only the controls to be tested are activated.
- Inform people before testing the alarming control devices and allow for possible panic responses.
- Inform people about any noise or mist which may be produced.
- Before testing the remote transmission, inform the corresponding alarm and fault signal receiving stations.

Modifications to the system layout and products

Modifications to the system and to individual products may lead to faults, malfunctioning and safety risks. Written confirmation must be obtained from Siemens and the corresponding safety bodies for modifications or additions.

Modules and spare parts

- Components and spare parts must comply with the technical specifications defined by Siemens. Only use products specified or recommended by Siemens.
- Only use fuses with the specified fuse characteristics.
- Wrong battery types and improper battery changing lead to a risk of explosion. Only use the same battery type or an equivalent battery type recommended by Siemens.
- Batteries must be disposed of in an environmentally friendly manner. Observe national guidelines and regulations.

Disregard of the safety regulations

Before they are delivered, Siemens products are tested to ensure they function correctly when used properly. Siemens disclaims all liability for damage or injuries caused by the incorrect application of the instructions or the disregard of danger warnings contained in the documentation. This applies in particular to the following damage:

- Personal injuries or damage to property caused by improper use and incorrect application
- Personal injuries or damage to property caused by disregarding safety instructions in the documentation or on the product
- Personal injury or damage to property caused by poor maintenance or lack of maintenance

Disclaimer

We have checked that the content of this document matches the hardware and software described. Despite this, we cannot rule out deviations and cannot therefore assume liability for them matching completely. The details in this document are checked regularly and any corrections needed included in subsequent editions.

We are grateful for any suggestions for improvement.

2.3 Standards and directives complied with

A list of the standards and directives complied with is available from your Siemens contact.

2.4 Release Notes

Limitations to the configuration or use of devices in a fire detection installation with a particular firmware version are possible.

⚠ WARNING

Limited or non-existent fire detection

Personal injury and damage to property in the event of a fire.

- Read the 'Release Notes' before you plan and/or configure a fire detection installation.
- Read the 'Release Notes' before you carry out a firmware update to a fire detection installation.

NOTICE

Incorrect planning and/or configuration

Important standards and specifications are not satisfied.

Fire detection installation is not accepted for commissioning.

Additional expense resulting from necessary new planning and/or configuration.

- Read the 'Release Notes' before you plan and/or configure a fire detection installation.
- Read the 'Release Notes' before you carry out a firmware update to a fire detection installation.

3 Structure and function

3.1 Overview

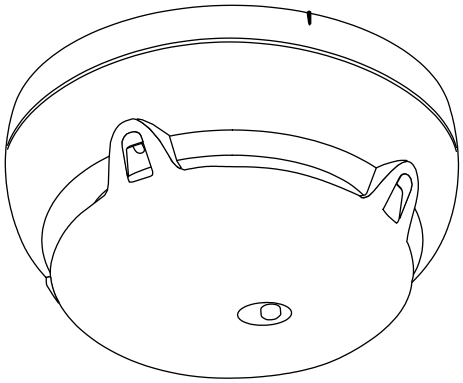

Neural fire detector FDOOTC241

Depending on the type of document, neural fire detector FDOOTC241 is known as the following:

Designation 1 (e.g. in technical documentation)	Designation 2 (e.g. in data sheets)
Neural fire detector	Multisensor fire detector

Properties

The neural fire detector FDOOTC241 has the following features:

- Communication via FDnet (addressed detector line)
- Built-in line separator
- S-LINE detector with large application range
- Signal processing with ASAtechnology and optional detection behavior (application-specific ASA parameter sets)
- Software can be used to set as:
  - Neural fire detector
  - Neural CO-supported fire detector
  - Wide-spectrum smoke detector
  - Heat detector

- Software can be used to set the detection behavior of the Technical CO Alarm regardless of the ASA parameter sets for fire.
- Software can be used to set temperature or CO ambient supervision with hysteresis.
- Detection of carbon monoxide (CO) at concentrations of 5 ppm CO or more (MAK value=30 ppm CO)
- Alarm indicator (red LED)

Check the version of your FS20 control panel. Some features are only available as of certain versions. For details, see List of compatibility.

See also

- Features of fire detection functionality [→ 18]
- Features of the Technical CO Alarm [→ 20]
- Features of the Technical Ambient Supervision Alarm [→ 22]
- Compatibility [→ 33]

3.1.1 Features of fire detection functionality

As an S-LINE detector, the FDOOTC241 has the following features with regard to its fire detection functionality:

- Dynamic influence on the parameter sets
- Pattern recognition
- Real time interpretation of the situation
- Process- and time-controlled switchover of the parameter sets

Signal processing is based on ASAtechnology (ASA = Advanced Signal Analysis). ASAtechnology can also be characterized as second generation algorithms. Signal processing with ASAtechnology allows for optimum adaptation of detector behavior to the corresponding ambient conditions.

The S-LINE detectors are characterized by their unique detection reliability and high immunity to deceptive phenomena.

Operating mode: Signal processing with ASAtechnology

The following figure shows signal processing with S-LINE detectors in the form of a diagram.

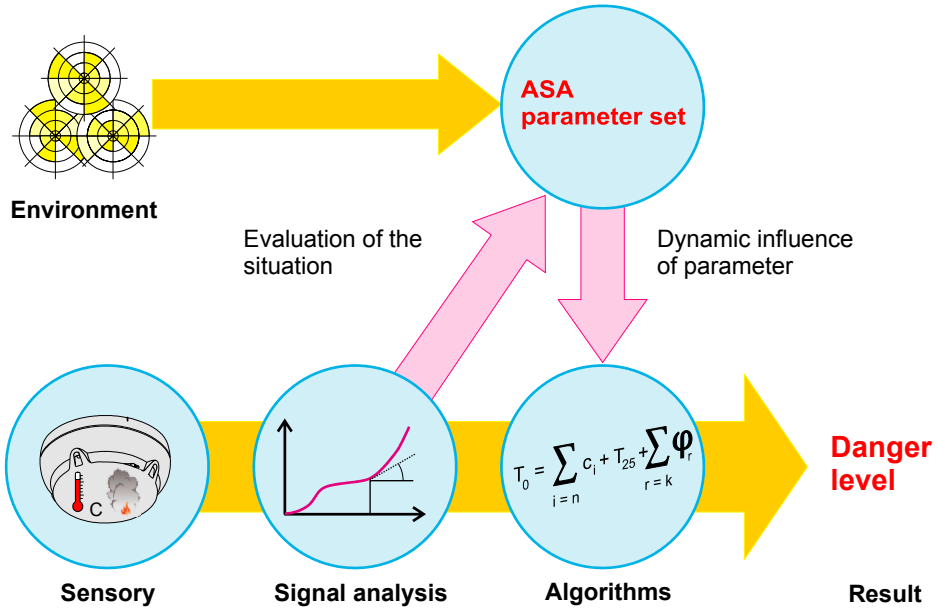

Signal processing with ASAtechnology

Sensory

The signals captured by the sensory are transmitted to the algorithm. The algorithms are set by selecting the parameter set.

Algorithms

In comparison to the detection algorithms (DA), the individual parameters of the selected parameter set can be adapted with ASAtechnology. A real time interpretation of the situation leads to a dynamic influence on the algorithm. The real time interpretation results in a broadening of the application range of the parameter set and thus of the detector. The detector reacts more sensitively in the event of fire, and more robustly in the event of deceptive phenomena.

Switching over the parameter set

In addition to selecting the parameter set, the S-LINE detectors enable time- or process-controlled switching over of the parameter sets (Manned/Unmanned switchover). The time- or process-controlled switching over of parameter sets allows the detector to be used in places where the situation changes significantly on a regular basis (e.g. kitchens, production halls).

Parameter sets which can be loaded

The detectors have several permanently programmed parameter sets. For special applications new, additional parameter sets can be downloaded in the field (depending on the control panel).

See also

Fire detection [→ 40]

3.1.2 Features of the Technical CO Alarm

Alongside its fire detection functionality, the FDOOTC241 also has a CO detection functionality with the following features:

- Static or dynamic alarm profiles
- Real time interpretation of the situation
- Process- and time-controlled switchover of the parameter sets for CO

Signal processing by the 'Technical CO Alarm' is undertaken regardless of CO signal processing for the fire detection functionality with the 'Suppression CO' and 'Balanced CO' parameter sets.

The signal processing feature of the 'Technical CO Alarm' enables optimum calculation of the CO concentration. The electro-chemical cell allows the best possible level of accuracy to be obtained depending on the ambient conditions.

The FDOOTC241's CO detection is characterized by the ability for parameters to be set and a relatively low cross-sensitivity to other gases, e.g. ethanol or hydrogen (H(H_2).

Function of the Technical CO Alarm's signal processing

The following figure shows CO signal processing by the FDOOTC241 as a diagram.

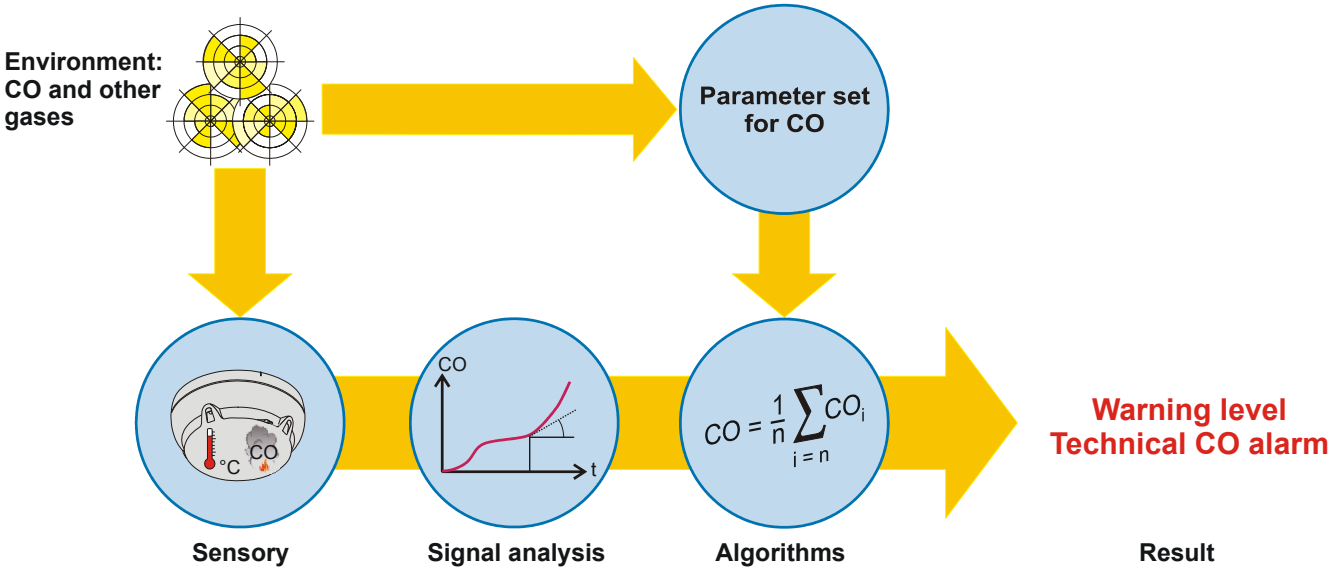

Signal processing by the technical CO alarm

Sensory

The signals captured by the CO sensor are corrected with regard to CO exposure, sensor sensitivity, temperature and aging and supplied to the algorithm. The algorithms are set by selecting the parameter set.

Algorithms

The parameter set can be used to select static and dynamic algorithms. A real time interpretation of the ambient conditions results in improved measurement accuracy.

The alarm limits correspond to the specified or proposed limits in the respective standards.

Switching over of parameter set for the 'Technical CO Alarm'

The FDOOTC241 allows for the time-or process-controlled independent changing over of the parameter set for CO (Manned / Unmanned changeover). This function allows the detector to be used in places where the situation changes significantly on a regular basis.

Configurable parameter sets for the 'Technical CO Alarm'

The FDOOTC241 has several permanently programmed 'Technical CO Alarm' parameter sets.

!	*NOTICE*
	Functionality of 'Technical CO Alarm'
	There is a risk of undetected CO exposure
	● Use the documentation provided for the fire control panel to ensure that the parameters you want to set for the 'Technical CO Alarm' are supported by the control panel.

!	*NOTICE*
	The system is not controlled as laid down in EN 54-2
	Infringement of the EN 54-2 standard
	● The signals for CO detection alone must not be used to control fire detection equipment in accordance with EN 54-2.

See also

Technical CO alarm [→ 47]

3.1.3 Features of the Technical Ambient Supervision Alarm

In 'Technical Ambient Supervision Alarm' mode, the neural fire detector FDOOTC241 can detect an increase in temperature or CO concentration caused by hysteresis above a specified threshold value. The control panel is used to configure the parameters.

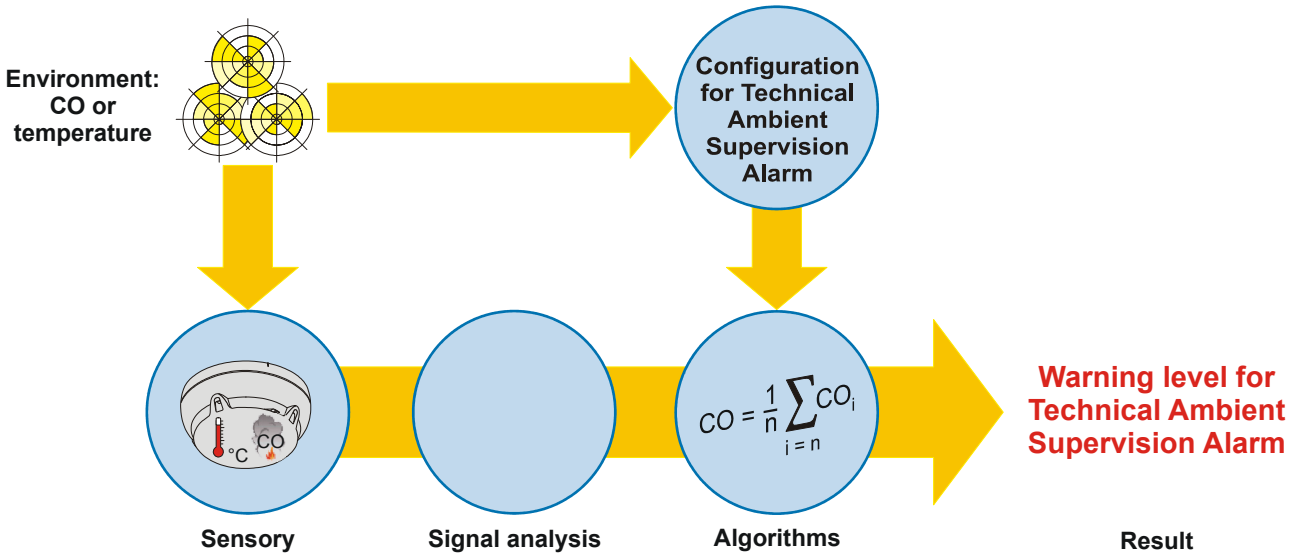

Signal processing by the Technical Ambient Supervision Alarm

!	*NOTICE*
	The system is not controlled as laid down in EN 54-2 Infringement of the EN 54-2 standard ● The signals for CO detection or temperature recording must not be used to control fire detection equipment in accordance with EN 54-2.

The 'Technical Ambient Supervision Alarm' function is only supported by FDOOTC241 neural fire detectors with ES ≥ 43.

See also

Technical Ambient Supervision Alarm [→ 53]

3.1.4 Details for ordering

Type	Order no.	Designation
FDOOTC241	S54311-F1-A1	Multisensor fire detector

3.2 Setup

The FDOOTC241 neural fire detector is a multiple criteria fire detector and is equipped with two optical sensors, two thermal sensors and one CO sensor.

Structure and function

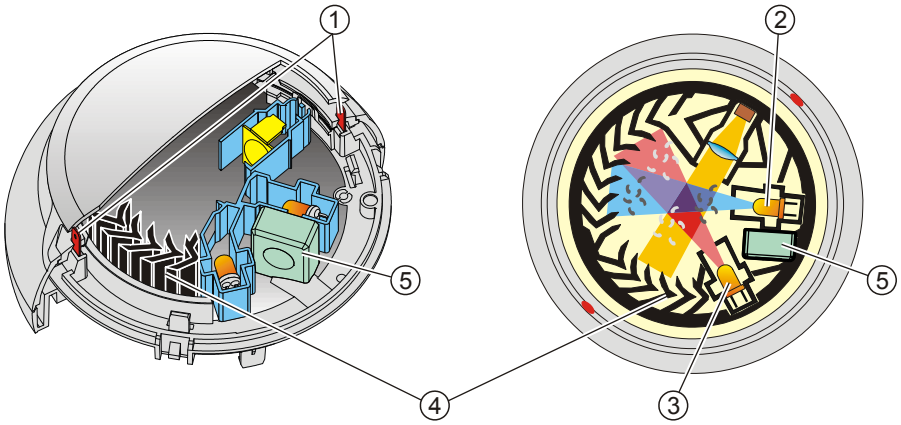

Sensors of the FDOOTC241

1	Heat sensors	4	Labyrinth
2	Backward scatterer	5	CO sensor
3	Forward scatterer		

Fire detection

The point detector's high-quality optoelectronic measuring chamber houses the following components:

- Two optical transmitters
- One optical receiver
- Two thermal sensors
- One CO sensor

The transmitters illuminate the smoke particles from different angles. One sensor acts as forward scatterer, the other as backward scatterer. The scattered light then hits the receiver (photodiode) and generates a measurable electric signal.

The combination of forward scatterers and backward scatterers allows for optimum detection of and distinction between light and dark particles. The distinction between light and dark particles firstly results in a homogeneous response behavior and secondly enables better differentiation between wanted signals and deceptive phenomena.

In addition, the heat sensors make it possible to detect fires without smoke generation.

The CO sensor enables faster detection of fires with incomplete combustion and fires with the development of a lot of CO.

The combination of optical, thermal and CO sensor signals optimizes detection reliability. This has the following advantages:

- Early detection of all types of fire, whether they generate light or dark smoke, or no smoke at all.
- The neural fire detector FDOOTC241 can be operated at a lower sensitivity level and thus achieves a higher immunity against false alarms which may otherwise be caused by cold aerosols (e.g. by smoking, electrical welding, etc.). In the case of an open fire, the smoke sensitivity is heightened by the temperature increase, which means that a detection reliability level that is comparable to that of the wide-spectrum smoke detector can be achieved.

You can set the following response behaviors on the neural fire detector FDOOTC241:

- Combined optical and thermal
- Combined optical, thermal and CO
- Optical smoke detector alone
- Heat detector alone

The response behavior is determined by selecting one of the following sensor modes:

- Sensor mode 0: Application as neural fire detector
- Sensor mode 1: Application as heat detector
- Sensor mode 2: Application as smoke detector

The sensor mode is configured with the configuration tool or on the control panel's person machine interface.

!	*NOTICE*
	Functionality of sensor modes Risk of alarm activation due to deceptive phenomena ● Depending on the configuration software used for the fire control panel, sensor modes 1 and 2 may not be available. If the deceptive phenomena occurring (e.g. artificial mist) mean that only one heat detector can be operated, the FDOOTC241 cannot be used in such environments.

Combined optical-thermal or optical-thermal CO mode is selected by choosing the parameter set in sensor mode 0.

The parameter sets of the heat detector or optical detector can be selected in sensor mode 1 or 2. The neural fire detector FDOOTC241 then acts in a similar way to heat detector FDT241 or smoke detector FDO241.

Technical CO alarm

The detector has a high-quality CO sensor which is based on the measurement principle of the electro-chemical cell.

Instances of the specified CO concentration being exceeded can be detected by the CO sensor. The limit values vary depending on the parameters set.

You can set the following CO response behaviors on the neural fire detector FDOOTC241:

- Static CO alarm thresholds
- Dynamic CO alarm thresholds

The response behaviors are configured using the configuration tool on the control panel.

Technical Ambient Supervision Alarm

Technical Ambient Supervision Alarm' mode detects an increase in temperature or CO concentration caused by hysteresis above a specified threshold.

Temperature monitoring compares the current measured temperature with a preset threshold value.

CO monitoring compares the current measured CO concentration with a preset threshold value.

You can set the following parameters on the neural fire detector FDOOTC241:

- CO concentration or temperature threshold value
- Alarming when the temperature threshold value is exceeded or undershot
- Alarming when the CO concentration threshold value is exceeded
- Hysteresis range

The 'Technical Ambient Supervision Alarm' is configured on the control panel using the configuration tool.

3.3 Function

3.3.1 Parameter sets for fire

The detection behavior of the detectors is influenced by the parameter sets for fire, so that it can be specifically adjusted to the fire phenomena and environmental influences to be expected in the environment to be monitored.

All parameter sets for fire are programmed in the detectors. During commissioning, the optimum parameter set must be selected for the conditions at the place of installation. This is performed on the control panel on an FDnet detector line.

Always use the suitable parameter set for fire for the corresponding application.

The default parameter set is not always the suitable parameter set.

3.3.2 Danger levels for fire

The detector's signal processing efficiently distinguishes between fire events and deceptive phenomena. If the following points apply, a danger level has been reached:

- Measured values above a response threshold
- Progression of smoke density, temperature and CO concentration over a long period of time

The stated parameters are evaluated using algorithms (CO only with the parameter sets 'Suppression CO' and 'Balanced CO').

Neural fire detector FDOOTC241 can convey the following danger levels to the control panel:

Danger level	Meaning	Comment
0	No danger	Normal condition
1	Check situation	A different parameter set for fire should possibly be selected (inappropriate application)
2	Warning	Possible danger
3	Alarm	Fire

The evaluation of the danger level and the decisions to be taken (e.g. activation of remote transmission) are configured in the control panel.

3.3.3 Parameter sets for CO

Regardless of the parameter sets for fire, the CO detection behavior of the detector can be influenced by the separate parameter sets for CO and set specifically to the environmental influences expected in the area requiring monitoring.

All parameter sets for CO are programmed in the detectors. During commissioning, the optimum parameter set can be selected for the conditions at the place of installation. This is performed on the control panel on an FDnet detector line.

Unlike the parameter sets for fire, the parameter set for CO does not necessarily have to be configured. Provided that a control panel allows the parameter set for CO to be configured, we would recommend configuring it.

The neural fire detector FDOOTC241 cannot be operated as a pure CO detector. You must always select a parameter set for fire as well as the parameter set for CO.

3.3.4 Warning levels for CO

Measured values above a response threshold depending on the parameter set for CO are not the only basis for reaching a warning level for CO. The CO progression is also observed over a longer period of time and evaluated using algorithms.

Neural fire detector FDOOTC241 can convey the following warning levels to the control panel in the form of a technical message:

Warning level of the technical CO alarm	Meaning	Comment
0	No danger	Normal condition
1	Advance warning level 1/ CO loading	Increased CO concentration (MAK value=30 ppm CO exceeded)
2	Warning	High CO concentration
3	Alarm, evacuation	The CO concentration has reached dangerous levels. This warning level requires parameters to first be set for the CO evaluation. The warning level is not available in degraded mode operation or in default parameterization.

The evaluation of the danger level and the decisions to be taken (e.g. activation of remote transmission) are configured in the control panel.

3.3.5 Diagnosis levels

For the most part, the detector monitors its function by itself. The signals of all sensors are permanently monitored. In particular, the temperature sensors, light emitters, and light receivers are monitored to ensure that they are functioning correctly. Signal processing takes account of the monitoring results and adapts its behavior accordingly.

The following diagnosis levels are derived from the different control measurements:

- Normal
- Observe information
- Replacement recommended
- Replacement necessary
- Fault

For details, see table below.

The CO sensor can only be monitored for failure. For a functional test, the CO sensor must be tested with test gas.

When a fatal error (one which impairs the detector's function) occurs, a fault message is signaled. To correct the cause of the fault, additional information is available in the detector. This can be displayed by the FDUD292 detector exchanger and tester or FDUD293 intelligent detector tester for example.

For details, see Documents 007227 and 009718.

Information displayed on the detector exchanger and tester	Meaning	Actions
'no deviation'	Normal, no fault is present The detector is fully functional	None
'maybe excha.' [1]	Observe information The detector is fully functional Slightly soiled	Check cause during periodic maintenance
'advice excha.' [1]	Replacement recommended Detector is still functional, in spite of minor problems: ● Average soiling ● Untypical sensor values caused by environmental influence	● Remedy the cause during the next maintenance ● Replace detector if necessary
'needed excha.' [1]	Replacement necessary Detection possibly restricted; alarming is still possible: ● Heavily soiled, failure of one optical sensor ● Failure of one or both thermal sensors ● Failure of CO sensor for CO-supported parameter set selected. The detector is however still functioning as FDOOT.	● Inform maintenance service ● Replace detector
Any fault message [2]	Supply error	● Check detector line voltage ● Replace detector
	Software error (Watchdog error)	Replace detector
	Memory error	Replace detector
	Communication error involving detector and control panel	Remedy cause

[1] The information displayed on the detector exchanger and tester is always in English; no translation into the corresponding language.

[2] This status can be displayed together with another status, e.g. 'needed excha.' (replacement necessary).

3.3.6 Line separator

All FDnet devices are equipped with a line separator.

The FDnet device is equipped with electronic switches which isolate the defective part in case of a short-circuit on the detector line. The rest of the detector line remains serviceable. On a loop line all FDnet devices remain fully functional after a simple error.

3.3.7 Internal alarm indicator

The detector has an internal alarm indicator. The internal alarm indicator shows the detector's operating condition (see table).

Operating condition	Alarm indicator (AI) flashing
Normal	AI flashes weakly every 4 seconds
Test	AI flashes weakly every 0.5 seconds
Alarm	AI lights up every second

3.3.8 Connection for external alarm indicators

You can connect two external alarm indicators to the detector. One external alarm indicator can be connected to any detector in the FDnet. The trigger for activating the alarm indicator can be programmed at the control panel.

Instead of an optical alarm indicator that flashes in the event of an alarm, the sounder base is provided with an acoustic alarm indicator.

See also

- Connection diagram [→ 69]
- Addressed sounder base FDSB291 [→ 35]

3.3.9 Renovation mode

Select renovation mode if major work is being carried out in the room and large volumes of dust or aerosols are being produced.

In renovation mode, the neural fire detector and the heat detector only trigger alarm when the temperature exceeds 80 °C for 20 seconds.

The wide-spectrum smoke detector does not trigger alarms in renovation mode but continues to work normally.

3.3.10 Test mode

For testing purposes the detector can be set to test mode. In test mode the detector reacts faster and with a higher sensitivity level. The detector can be tested with the detector exchanger and tester FDUD292 or the intelligent detector tester FDUD293.

Electronic testing:

The detector can be tested with the detector exchanger and tester FDUD292 or the intelligent detector tester FDUD293.

For details, see Documents 007227 and 009718.

Physical testing:

- The optical function part on the neural fire detector can also be tested with the test gas REF 8 or REF 8-S.
- The heat sensors of the neural fire detector can be tested with a hot air fan.
- The CO sensor can be tested with the test gas REF 8-C.

See also

Testing detectors [→ 75]

3.3.11 Behavior in degraded mode

Applicable for the FDnet:

If the main processor of the fire control panel fails, the control panel enters degraded mode operation. Depending on the control panel, the fire control panel may continue to provide the main alarming functions and signaling functions in degraded mode operation.

Degraded mode operation behavior on control panels that support degraded mode operation:

- Alarming is still ensured in degraded mode operation. However, in degraded mode operation, only collective alarming is possible. This means that in the event of an alarm, it is possible to identify the detector line but not the exact location of the detector triggering the alarm.
- If a sounder base is connected to the output for the external alarm indicator, it is activated in degraded mode operation if there is a fire alarm (only with detectors and sounder bases with ES ≥ 30). Configuration for a specific control panel is possible.
- When the connection for the external alarm indicator is used for a control function (e.g. hold-open system), the output assumes the configured fail-safe position; configuration for a specific control panel is possible.

In degraded mode operation, the FDOOTC241 only supports the 'Fire' alarm class. If the 'CO' alarm class is also to be supported in degraded mode operation, technical customer support should be informed.

Degraded mode operation on the FDnet is not supported in the same way by all control panels. The information in the 'List of compatibility' and in the corresponding control panel documentation must be taken into account during project planning.

3.3.12 Interface to service devices

A proximity interface (MC link) is available for commissioning and maintenance in order to communicate with the detector exchanger and tester FDUD292 and the intelligent detector tester FDUD293.

For details, see Documents 007227 and 009718.

See also

Status polling with the detector exchanger and tester [→ 74]

3.3.13 Line tester

The line tester FDUL221 is able to recognize and localize the following errors on the FDnet:

- Wiring error
- Open line
- Short-circuit
- Ground fault

In addition, the line tester recognizes the devices connected to the FDnet detector line.

For details, see document 008250.

3.4 Mechanical setup

To install a fire detector, a detector base is always required. After mounting the detector base the fire detector is simply screwed into the base by hand, with the detector exchanger or with the detector exchanger and tester.

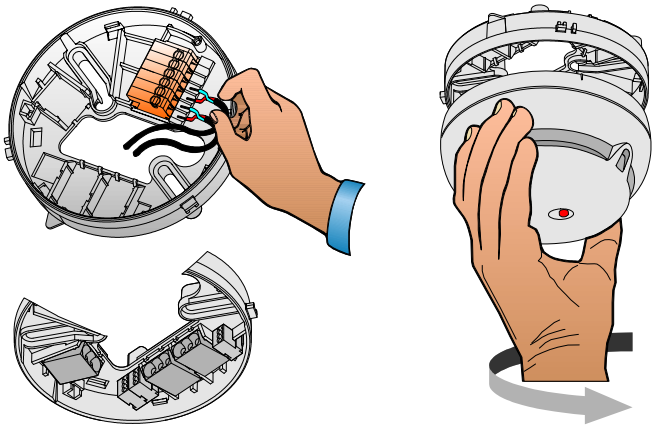

Fire detector installation

Properties

- Quick installation and reliable contact due to screwless terminals
- Insertion of the insulated wires without any tools
- The centered alarm indicator makes an alignment of the detector base superfluous
- Space for up to 6 auxiliary terminals for connecting detector heating units, shielded cables etc.

Accessories are available for the various applications.

See also

Accessories [→ 34]
Mounting / Installation [→ 57]

3.5 Compatibility

The neural fire detector FDOOTC241 is compatible with FS20 control panels.

For details see 'List of compatibility'.

Limitations to compatibility

- The 'Technical Ambient Supervision Alarm' is available from an ES ≥ 43.

3.6 Accessories

3.6.1 Addressable detector base FDB221/FDB221-AA

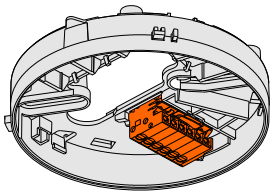

- For the installation of point detectors and alarm sounders
- For the recess-mounted cable entry
- For the surface-mounted cable entry, up to 6 mm cable diameter
- Orange terminal block
- Detector base FDB221-AA additionally with a micro terminal
- Compatible with:
  - Point detectors from the 'Sinteso' product line
  - Alarm sounder FDS221
  - Alarm sounder beacon FDS229
- Order no. FDB221: A5Q00001664
- Order no. FDB221-AA: A5Q00012741

See also

Addressable detector base FDB221 [→ 58]

3.6.2 Flat, addressable detector base FDB222

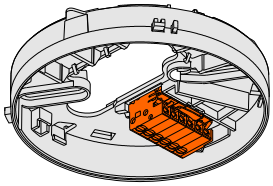

- For the installation of point detectors and alarm sounders
- For the recess-mounted cable entry
- Directly attached to the mounting surface
- Orange terminal block
- Compatible with:
  - Point detectors from the 'Sinteso' product line
  - Alarm sounder FDS221
  - Alarm sounder beacon FDS229
- Order no.: A5Q00016447

See also

Flat detector base FDB222 [→ 59]

3.6.3 Addressed sounder base FDSB291

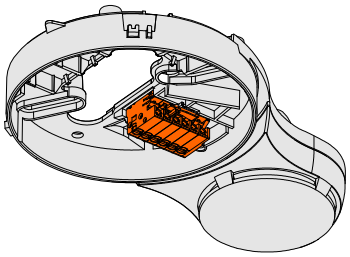

- For acoustic alarming in the case of an event
- For the FDnet detector line
- Orange terminal block
- With two micro terminals
- For the recess-mounted cable entry
- For the surface-mounted cable entry, up to 6 mm cable diameter
- Compatible with:
  - Neural fire detector FDOOT2xx
  - Neural fire detector FDOOTC2xx
  - Wide-spectrum smoke detector FDO2xx
  - Heat detector FDT2xx (as of ES ≥43)
- For details, see document 007025
- Order no.: A5Q00001647

3.6.4 Base attachment FDB291

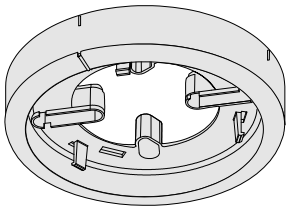

- For the surface-mounted cable entry, as of 6 mm cable diameter
- Compatible with:
  - Detector base FDB2x1/FDB2x1-AA
  - Flat detector base FDB2x2
- Order no.: A5Q00001603

See also

Base attachment FDB291 [→ 60]

3.6.5 Base attachment humid FDB293

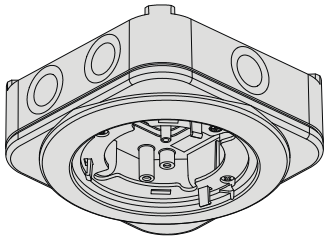

- For installation in humid, wet environments and if the detector heating unit is used
- Protection category achievable: IP54
- Six break-out points for M20 x 1.5 metal cable glands
- Compatible with:
  - Detector base FDB2x1/FDB2x1-AA
  - Flat detector base FDB2x2
  - Detector heating unit FDBH291
  - Designation plate DBZ1193A
  - M20 x 1.5 metal cable gland
- Order no.: A5Q00003945

See also

Base attachment humid FDB293 [→ 61]

3.6.6 Detector heating unit FDBH291

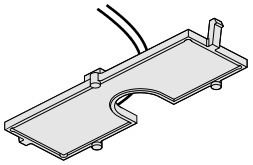

- For operating point detectors in critical ambient conditions during icy conditions or when there is a danger of moisture condensation
- Compatible with:
  - Addressable detector base FDB2x1/FDB2x1-AA
  - Flat detector base FDB2x2
  - Base attachment humid FDB293
- Order no.: A5Q00004439

See also

Detector heating unit FDBH291 [→ 64]

3.6.7 Designation plate FDBZ291

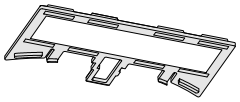

- To identify the location
- Compatible with:
  - Addressable detector base FDB221/FDB221-AA
  - Flat, addressable detector base FDB222
  - Detector base FDB271
  - Sounder base FDSB29x
  - Base attachment FDB291
- Order no.: A5Q00002621

See also

Designation plate FDBZ291 [→ 63]

3.6.8 Designation plate DBZ1193A

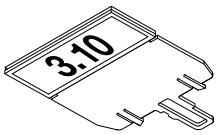

- To identify the location
- Compatible with:
  - Base attachment humid FDB293
- Order no.: BPZ:4864330001

See also

Designation plate DBZ1193A [→ 63]

3.6.9 Detector locking device FDBZ293

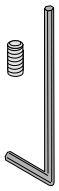

- For protection against theft
- Compatible with:
  - Point detectors from the 'Sinteso' product line
  - Alarm sounder FDS221
  - Alarm sounder beacon FDS229
- Order no.: A5Q00005035

See also

Detector locking device FDBZ293 [→ 62]

3.6.10 Dummy detector FDX291

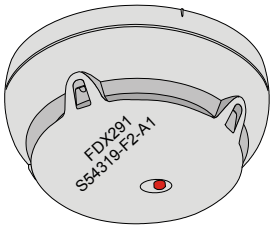

- To protect the detector base from dirt
- External labelling for identification
- Does not open the contact in the detector base
- Compatible with:
  - Detector base FDB2xx
  - Sounder base FDSB29x
- Order no.: S54319-F2-A1

3.6.11 Detector dust cap FDZ291

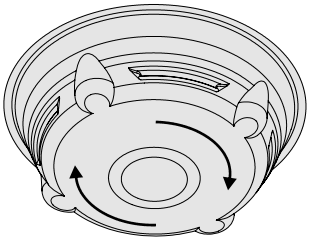

- To protect the point detector from dust
- Compatible with:
  - Point detectors from the 'Sinteso' product line
- Order no.: A5Q00004814

See also

Detector dust cap FDZ291 [→ 72]

3.6.12 Protective cage DBZ1194

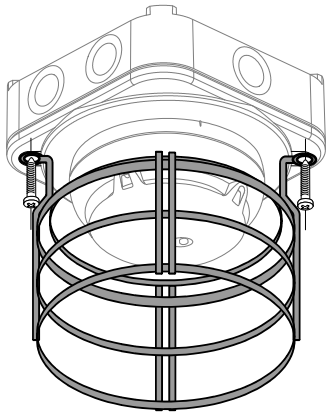

- To protect the devices against mechanical damage
- Can only be used in conjunction with the base attachment humid FDB293
- Order no.: BPZ:4677110001

See also

Protective cages [→ 65]

3.6.13 EMC-protective cage FDBZ294

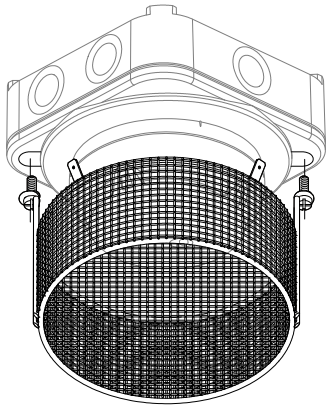

- To protect the devices against mechanical damage and electromagnetic fields
- Must be connected with earth connection
- Compatible with:
  - Base attachment humid FDB293
- Order no.: A5Q00023040

See also

Protective cages [→ 65]

3.6.14 Micro terminal DBZ1190-AA

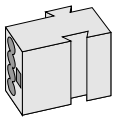

- Auxiliary terminal for connecting cables
- For T-branches of additional cabling for detector heating units, sounder base, external alarm indicators, etc.
- For wire diameters of 0.28 … 0.5 mm^2
- 4-pin
- Order no.: BPZ:4677080001

3.6.15 Connection terminal DBZ1190-AB

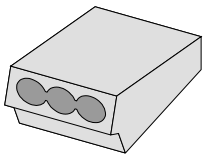

- Auxiliary terminal for connecting cables
- For T-branches of additional cabling for cable shielding, detector heating units, sounder base, external alarm indicators, etc.
- For wire diameters of 1 … 2.5 mm^2
- 3-pin
- Order no.: BPZ:4942340001

3.6.16 M20 x 1.5 metal cable gland

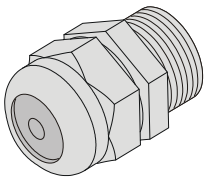

- For introducing a cable into a housing
- Compatible with:
  - M20 x 1.5 metal counter nut
- Order no.: A5Q00004478

4 Planning

4.1 Fire detection

4.1.1 Ambient features

In selecting the optimum fire alarm parameter set, the following factors must be taken into account:

- Risk of injury to persons
- Concentration of valuable items
- Room geometry
- Deceptive phenomena
- Risk of fire
- Critical fire size

Risk of injury to persons

People are extremely endangered in localities such as concert halls, nursing homes or hospitals. The risk of injury to persons is therefore very high in such places. In canteen kitchens the situation is different. Few people work in such facilities and are able to save themselves in the event of timely alarms. The risk of injury to persons is thus rather low in this case.

Concentration of valuable items

Irreplaceable cultural assets are often on display in museums. Computer centers house servers with large data volumes. The concentration of valuable items is rather high. In a normal hotel room the concentration of valuable items must be classified as low.

Room geometry

High ceilings, complex room shapes or well ventilated rooms have a complex room geometry. This aggravates early fire detection, as it is difficult for the fire phenomenon to reach the fire detector. An office room with normal ceiling height has a simple room geometry.

Deceptive phenomena

Deceptive phenomena can deceive a fire detector and bring about a false alarm. Depending on the fire detector in question, the deceptive phenomena may be e.g. vapor, cigarette smoke, dust, dry ice in discotheques, exhaust fumes, aerosols occurring during welding or heat sources such as radiant heaters or hot engines.

In a small hotel room with a rather low ceiling where vapor from the bathroom may penetrate the room, or in operating facilities where a lot of dust is generated, many deceptive phenomena must be taken into consideration. In a clean room where electronic modules are fabricated the risk of deceptive phenomena is rather low.

Risk of fire

In production facilities where highly combustible materials such as flammable liquids, cotton, paper etc. are processed and where electrical machines are operated, the fire risk is very high. Minor overheating or sparks may cause a fire. In a storehouse where steel is stored and where no electrical installation is provided with the exception of lighting, the fire risk is very low.

Critical fire size

When a waste paper basket in a metal-processing facility catches fire, the consequential damage is usually rather low. Here we are talking about a critical, medium fire size that can still be tolerated. The situation is completely different in pharmaceutical production facilities where even the lowest smoke concentration may impair the process and where combustible materials are processed. Even the smallest fire must be detected immediately. In this case, we speak of a small admissible critical fire size.

4.1.2 Parameter sets: Sensor mode 0 'neural fire detector'

4.1.2.1 Description

(Parameter set numbers in brackets)

High Suppression (8):

To cover applications with permanent, optical deceptive phenomena (dry ice in discotheques, welding), this parameter set only reacts when a temperature rise of approx. 8 K is detected in addition to the optical signal. Due to the combination of optical and thermal signals, it is better suited than a pure heat detector. This parameter set is also suited for applications that can otherwise only be covered with special detectors.

Suppression (5):

Thanks to its very robust behavior, the 'Suppression (5)' parameter set is particularly suited for rooms where deceptive phenomena such as vapor, very dense cigarette smoke or exhaust fumes can be expected. It reacts in a very robust way to the deceptive phenomenon vapor.

Suppression CO (12):

Thanks to its very robust behavior, this parameter set is particularly suited for rooms where deceptive phenomena such as vapor, cigarette smoke or exhaust fumes can be expected. It reacts in a very robust way to the deceptive phenomenon vapor. In the event of smoldering fires or fires in rooms where cleaning products are stored, the parameter set reacts quicker than the 'Suppression (5)' parameter set as it takes the CO concentration into account.

High Compensation (7):

This parameter set reacts in the same way as the 'Robust (2)' parameter set, however, the compensation range is twice as large. This parameter set is thus especially suited for rooms in which a lot of dust and other deposits can be expected during longer periods.

Robust (2):

The priority of the 'Robust (2)' parameter set is on robust response. The sensitivity is the same as with the 'Suppression (5)' parameter set; however, deceptive phenomena are not explicitly analyzed and suppressed. It is thus particularly suited to application in rooms where deceptive phenomena such as cigarette smoke or dust can be expected. The 'Robust (2)' parameter set is suitable for higher rooms in comparison to the 'Suppression (5)' parameter set.

Balanced (4):

The 'Balanced (4)' parameter set displays a balanced response behavior in its response to fires and robustness to deceptive phenomena. It reacts faster with open fires. It reacts slower with vapor, cigarette smoke or smoldering fires.

Balanced CO (10):

This parameter set displays a balanced response behavior in its response to fires and robustness to deceptive phenomena. It reacts faster with open fires. It reacts slower with vapor and cigarette smoke. In the event of smoldering fires or fires in cleaning rooms, the parameter set reacts quicker than the 'Balanced (4)' parameter set as it takes the CO concentration into account.

Thanks to the fact that three criteria are evaluated (smoke, heat and CO concentration), this gives particular robustness to deceptive phenomena when compared with more sensitive parameter sets.

Fast Response (6):

This parameter set reacts in a fast and highly sensitive manner. It is thus especially suited for rooms without deceptive phenomena, where the priority is on detecting the fire as early as possible.

High Sensitive Fast (9):

This parameter set is suited for applications requiring very high sensitivity levels. It reveals a significantly higher optical and thermal sensitivity than 'Fast Response (6)'. This parameter set is also suited for applications that can otherwise only be covered with special detectors.

Download 1 (14) / Download 2 (15):

Application-specific parameter sets that can be loaded on site (depending on the control panel).

4.1.2.2 Application

No.	Name	Risk of injury to persons	Concentration of valuable items	Room geometry	Deceptive phenomena	Risk of fire	Critical fire size
		small … large	low … high	simple … complex	few … many	small … large	small … medium
8	High Suppression						
5	Suppression						
12	Suppression CO						
7	High Compensation						
2	Robust						
4	Balanced						
10	Balanced CO						
6	Fast Response						
9	High Sensitive Fast						

The 'High Suppression' and 'High Sensitive Fast' parameter sets are only suited to special applications.
Depending on the application, the 'Balanced CO' or 'Fast Response' parameter set can be selected for replacing an old detector with the 'Sensitive' parameter set in sensor mode 0.

4.1.2.3 Specification

The following table shows the characteristics and fields of application of the parameter sets of neural fire detector FDOOTC241.

No.	Name	Optical			Thermal		
		Typ. response time from - typ. - to	Sensitivity, open fire	Sensitivity, smoldering fire	Static activation temperature	Differential activation temperature (temperature increase > 10 K/min)	Differential activation possible from:
		[s]	[%/m]	[%/m]	[°C]	ΔT [K]	[°C]
8	High Suppression (as of ES ≥30) [2]	60 - 80 - 360	2.3	8	80	25	30
5	Suppression [3]	90 - 160 - 760	3.2	11.4	80	29	30
12	Suppression CO [1]	75 - 150 - 760	3.2 [5]	8.6 … 11.4 [4]	80	29	30
7	High Compensation	80	3.2	11.4	80	29	30
0	High Compensation	80	3.2	11.4	80	29	30
2	Robust	80	3.2	11.4	80	29	30
4	Balanced	40 - 64 - 300	2.3	8	80	25	30
10	Balanced CO [1]	25 - 50 - 300	2.3 [5]	5 … 8 [4]	80	25	30
6	Fast Response	20 - 30	1.6	5.6	80	22	3
9	High Sensitive Fast	20 - 30	0.8	2.8	60	16	3
14	Application-specific parameter sets						
15							

1 The CO signal helps to speed up alarm activation in the event of smoldering fires but cannot trigger fire alarms on its own.

2 Note chapter '4.1.3.1 Description', 'High Suppression (8)' paragraph.

3 Only implemented for reasons of compatibility. If the 'Suppression (5)' parameter set is needed, 'Suppression CO (12)' should be used for new applications.

4 Depends on CO proportion.

5 In the case of open fires, the proportion of CO in the fire gas make-up is low. With higher proportions of CO, the sensitivity could theoretically increase to up to 0.5 %/m (i.e. e.g. instead of 2.3 %/m to 1.8 … 2.3 %/m) with open fires.

The static activation temperature of 80 °C is higher than the permanently approved operating temperature range of the electro-chemical cells used for CO detection.
The detector may only be used in continuous operation within the specified temperatures!

All parameter sets except for 8 comply with standards EN 54-7 and CEA 4021.

4.1.3 Parameter sets: Sensor mode 1 'heat detector'

This sensor mode is especially suited for applications where the detector should only react thermally.

No.	Name
0	A1R
1	A1R
2	BR
3	A1S
4	BS

All parameter sets meet the criteria of standard EN 54-5.

4.1.4 Parameter sets: Sensor mode 2 'smoke detector'

Select sensor mode 2 when fast temperature changes may occur which are not caused by fire (e.g. radiant heaters, hot engines). In this sensor mode the detector only reacts optically; this is comparable with a wide-spectrum smoke detector. Thanks to a second optical sensor, however, it display an optimized response behavior in relation to the different types of fire.

Robust (2):

This parameter set reacts to aerosols in a similar way as the neural fire detector FDOOTC241 in sensor mode 0 with the 'Robust' parameter set, without taking into account the temperature.

Universal (1):

With 'Universal' the sensitivity and response time to aerosols are between 'Robust' and 'Sensitive'.

Sensitive (3):

With regard to aerosols, this parameter set reacts in a way that is comparable to 'Fast Response' in sensor mode 0 without temperature influence.

No.	Name	Response time [s]	Sensitivity open fire / smoldering fire [%/m]
0	Universal	50	2.3 / 8
2	Robust	80	2.3 / 8
1	Universal	50	2.3 / 8
3	Sensitive	30	1.6 / 5.6

All parameter sets meet the criteria of standard EN 54-7.

4.1.4.1 Application

No.	Name	Risk of injury to persons	Concentration of valuable items	Room geometry	Deceptive phenomena	Risk of fire	Critical fire size
		small … large	low … high	simple … complex	few … many	small … large	small … medium
2	Robust						
1	Universal						
3	Sensitive						

4.1.5 Default settings

When delivered, the default parameter set (parameter set 0) is set in fire detector FDOOTC241.

The following table shows the default parameter set in the various sensor modes.

Fire detector FDOOTC241	Default parameter set
Sensor mode 0 (neural fire detector)	High Compensation
Sensor mode 1 (heat detector)	A1R
Sensor mode 2 (smoke detector)	Universal

Upon commissioning of the fire detection system, the optimum parameter set must be selected based on the existing risk and the ambient conditions.

When the control panel is first started up, the fire detectors are automatically set to their country-specific basic setting. Individual adaptation is performed using the control panel's configuration tool.

4.1.6 Application examples

Application recommendations such as the selection of the detector settings for the various applications are described in document 010030.

The following table includes examples regarding the selection of the parameter set for the FDOOTC241. The examples cannot be used universally, but illustrate typical applications.

Environment	Deceptive phenomena / detector behavior	Parameter set
Normal office, room without any particular deceptive phenomena	–	'Robust (2)' in sensor mode 0
Rooms with potential risk to persons due to smoldering fires, CO development	–	'Balanced CO (10)' Alternatively 'Balanced (4)'
Possible deceptive phenomena, e.g. electric kettle	Vapor as deceptive phenomenon	'Balanced CO (10)' or 'Suppression CO (12)' Alternatively 'Balanced (4)' or 'Suppression (5)'
Cleaning rooms (e.g. in hotels)	Vapors from cleaning materials	'Balanced CO (10)' Alternatively 'Balanced (4)'
Kitchen	A lot of vapor as deceptive phenomenon	'Suppression CO (12)' or 'Balanced CO (10)' Alternatively 'Suppression (5)' or 'Balanced (4)'
Hospital room, museum	Quick response needed; no deceptive phenomena expected	'Fast Response (6)'
Clean room	Fast and very sensitive reaction required	'High Sensitive Fast (9)'

4.2 Technical CO alarm

!	*NOTICE*
	The system is not controlled as laid down in EN 54-2 Infringement of the EN 54-2 standard. ● The signals for CO detection alone must not be used to control fire detection equipment in accordance with EN 54-2.

4.2.1 Ambient features

In selecting the optimum parameter set for CO, the following factors must be taken into account:

Positioning the FDOOTC241

CO gas is slightly less dense than air and spreads evenly through the room when at a constant temperature.

However if CO is produced in a fire, it is warmer than the surrounding air and rises towards the ceiling with the smoke. If the FDOOTC241 is used as a fire detector for this scenario, the positioning rules which apply to fire detectors also apply to the FDOOTC241.

If the FDOOTC241 is used for the 'Technical CO Alarm' and if the CO gas comes from cold sources, e.g. gas canisters in the lab, then the FDOOTC241 can be installed on the wall at around head height rather than on the ceiling. The positioning rules for gas detectors must be consulted for more details.

Influence of the surroundings

At temperatures in excess of +55 °C (outside the device specification!), the CO sensor ages faster than expected and the guaranteed 5-year service life for the FDOOTC241 is reduced.

If the rooms requiring protection constantly have concentrations of ethanol of up to 500 ppm (= MAK value for ethanol), e.g. in breweries or whisky distilleries, since the electro-chemical cells have slight cross-sensitivity to ethanol, the 'Technical CO Alarm' is more likely to experience false alarms.

In a very dry and very hot climate, the response time of the CO sensor increases to around 120 s. The response of the FDOOTC241 to relatively slow increases in the CO concentration, e.g. in the event of fires, is not therefore affected. But very quick increases in the CO concentration are detected with a slight delay.

The CO sensor responds faster in very humid air than air of normal humidity. There are no limits here on use as a fire detector or for the 'Technical CO Alarm'.

The electro-chemical CO sensor of the FDOOTC241 has a slight cross-sensitivity to hydrogen (H_2), i.e. H_2 also causes CO signals. As H_2 can be produced when charging lead batteries and in electroplating plants, robust parameter sets which only cause an alarm when increased CO concentrations are detected should be used in such environments.

4.2.2 Parameter sets: Sensor mode 0 'Technical CO alarm'

4.2.2.1 Description

(Parameter set numbers in brackets)

Robust EU1 (0):

Default parameter set with a static alarm threshold of 60 ppm CO. This parameter set has a large compensation range and rapid compensation.

Balanced EU2 (1):

This parameter set corresponds to the dynamic CO alarm thresholds according to EN 50291:2001. The parameter set has a small compensation range.

Static 40 (4):

This parameter set has a static alarm threshold of 40 ppm CO. The parameter set has a small compensation range.

Static 50 (5):

This parameter set has a static alarm threshold of 50 ppm CO. The parameter set has a small compensation range.

Static 60 (6):

This parameter set has a static alarm threshold of 60 ppm CO. The parameter set has a small compensation range.

Balanced US1 (7):

This parameter set corresponds to the dynamic CO alarm thresholds according to UL 2034. The parameter set has a small compensation range.

See also

Specification [→ 51]

4.2.2.2 Application

No.	Name	Risk of increased concentration of CO (risk of damage to persons)	CO concentration	Room geometry	Deceptive phenomena	Compensation range
		small … large	low … high	simple … complex	few … many	small … large
0	Robust EU1					
1	Balanced EU2 [1]					
4	Static 40					
5	Static 50					
6	Static 60					
7	Balanced US1 [1]					

[1] Time-dependent

4.2.2.3 Specification

The table below shows the characteristics and fields of application of the parameter sets for CO of neural fire detector FDOOTC241.

No.	Name	Response thresholds of warning levels 1 to 3, technical CO alarm [ppm CO]			Response time, warning level 3 technical CO alarm [min]	Alarming according to standard
		1	2	3		
0	Robust EU1	30	60	– [1]	–	–
1	Balanced EU2 @ 33 ±3 ppm CO @ 55 ±5 ppm CO @ 110 ±10 ppm CO @ 330 ±30 ppm CO	30	50	–	– ≥120 60 … 90 10 … 40 ≤3	EN 50291
4	Static 40	30	35	40	–	–
5	Static 50	30	40	50	–	–
6	Static 60	30	45	60	–	–
7	Balanced US1 @ 70 ±5 ppm CO @ 150 ±5 ppm CO @ 400 ±10 ppm CO	30	50	–	– 60 … 240 10 … 50 4 … 15	UL 2034

[1] Warning level 3 is not output in the default parameter set (not configured).

Example for parameter set 1 'Balanced EU2' @ 55 ±5 ppm CO:

At 50 ppm CO, alarming must take place after between 60 and 90 minutes.

At an ambient temperature of ≥ 80 °C, the CO sensor may not function reliably. Irreversible signaling of a critical fault therefore follows.

The FDOOTC241 may only be used in continuous operation within the specified temperatures!

See also

Technical data [→ 78]

4.2.3 Default settings

When the neural fire detector FDOOTC241 is supplied, the default parameter set for CO (parameter set 0, 'Robust EU1') is set.

The optimum parameter set for CO must be selected when commissioning the fire detection system. The selection criteria are the existing risk and ambient conditions.

When the control panel is first started up, the fire detector is automatically set to its country-specific basic setting. Individual adaptation is performed using the corresponding control panel's configuration tool.

4.2.4 Application examples

Application recommendations such as the selection of the detector settings for the various applications are described in document 010030.

The following table includes examples regarding the selection of the parameter set for CO for the FDOOTC241. The examples cannot be used universally, but illustrate typical applications.

Environment	Detection behavior wanted	Parameter set for CO
Rooms with open fire	Very fast response needed	Static 40 (4)
Heating rooms	Evaluation of time dependency of CO concentration	Balanced EU2 (1) or Balanced US1 (7)
Combustion or fermentation plants	Very robust behavior towards deceptive phenomena	Robust EU1 (0)
Car parks, automotive workshops	Robust behavior towards deceptive phenomena	Balanced EU2 (1) or Balanced US1 (7)
Underpasses and escape compartments	Evaluation of time dependency of CO concentration	Balanced EU2 (1) or Balanced US1 (7)
Animal stalls	Fast reaction required	Static 50 (5)
Chemical labs or production sites	Fast and very sensitive reaction required	Static 40 (4) alternatively Balanced EU2 (1)

4.3 Technical Ambient Supervision Alarm

!	*NOTICE*
	The system is not controlled as laid down in EN 54-2 Infringement of the EN 54-2 standard ● The signals for CO detection or temperature recording must not be used to control fire detection equipment in accordance with EN 54-2.

The 'Technical Ambient Supervision Alarm' function is only supported by FDOOTC241 neural fire detectors with ES ≥ 43.

4.3.1 Ambient features

In markets where the use of the 'Technical Ambient Supervision Alarm' is permitted, the neural fire detector FDOOTC241 can be positioned above or near objects which require the ambient temperature or CO concentration to be monitored to prevent damage.

The following ambient conditions are detected in 'Technical Ambient Supervision Alarm' mode:

- An increase or decrease in temperature caused by hysteresis
- An increase in CO concentration caused by hysteresis

You can set the following parameters on the control panel:

- CO concentration or temperature threshold value
- Alarming when the temperature threshold value is exceeded or undershot
- Alarming when the CO concentration threshold value is exceeded
- Hysteresis range

For more detailed information, please refer to the control panel documentation.

Example of temperature monitoring caused by hysteresis:

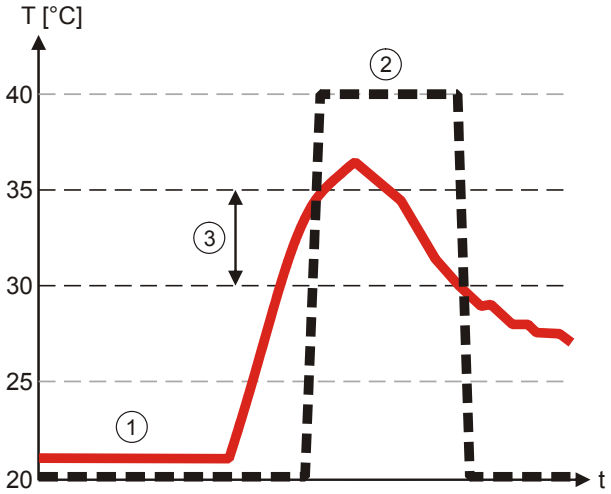

Ambient supervision output signal when the ambient temperature threshold value of 35 °C is exceeded and a hysteresis range of 5 °C is selected

1 Temperature progression
2 Output signal
3 Hysteresis range

When an ambient temperature of 35 °C is reached, the neural fire detector FDOOTC241 sends an output signal to the control panel. As long as the hysteresis range is not undershot, the output signal is sent.

In the example shown, the output signal is no longer sent once the ambient temperature of 30 °C (threshold value minus hysteresis range) is undershot.

4.3.1.1 Temperature monitoring

Temperature monitoring compares the current measured temperature with a preset threshold value.

You can select the following comparisons:

- **Temperature exceeded:** Alarming takes place when the measured temperature exceeds the set threshold value.
- **Temperature undershot:** Alarming takes place when the measured temperature undershoots the set threshold value.

The threshold value can be selected within the permissible ambient temperature for the FDOOTC241.

The permissible ambient temperature for the FDOOTC241 is -20 … +50° C.

Hysteresis ranges

You can set two hysteresis ranges:

- Normal hysteresis range with a range of 1° C.
- Large hysteresis range with a range of 5° C.

4.3.1.2 CO monitoring

CO monitoring compares the current measured CO concentration with a preset threshold value.

Alarming takes place when the current measured CO concentration temperature exceeds the set threshold value.

You can set the CO concentration threshold value in stages of 5 ppm between 20 and 600 ppm.

Hysteresis ranges

You can set two hysteresis ranges:

- A fixed hysteresis range of 5 % of the threshold value.
  - For low CO concentrations, a minimum hysteresis range of 2 ppm is specified.
  - For high CO concentrations, the hysteresis range is limited to 15 ppm.
- Instead of a having fixed hysteresis range, the average CO concentration over the last 15 minutes is calculated. Alarming takes place if the threshold value is exceeded.
  - The hysteresis range is permanently set to 6 ppm.

4.3.2 Configuration

The Technical Ambient Supervision Alarm is configured on the control panel using the configuration tool. You can configure the detector as follows:

Settings for temperature monitoring:

Adjustable values	Notes
Normal hysteresis range	Hysteresis range of 1 °C
Large hysteresis range	Hysteresis range of 5 °C
Temperature [°C] + 30	Permissible temperature range: -20 … +50 °C
Temperature undershot/ temperature exceeded	Selects whether the output signal should be sent when the set threshold value is undershot or exceeded.

Settings for CO monitoring:

Adjustable values	Notes
Normal	Hysteresis range of 5 % of the threshold value, max. 15 ppm
Slow	Average CO concentration over 15 minutes, hysteresis range of 6 ppm
CO concentration in stages of 5 ppm	Permissible CO range: 20 … 600 ppm

4.3.3 Default settings

When the neural fire detector FDOOTC241 is delivered, the 'Technical Ambient Supervision Alarm' mode is switched off.

You can switch on and configure the 'Technical Ambient Supervision Alarm' using the control panel.

For more detailed information, please refer to the control panel documentation.

See also

Configuration [→ 55]

5 Mounting / Installation

5.1 Required space

- Upon insertion of the detector, the detector base is stressed by compression, tension and torsion. The fixing must thus be designed accordingly.
- Detector bases must be placed flat on the ceiling.
- Avoid mounting on steps, concrete ribs, etc.
- Mount the detector base directly on the recessed box, or together with a base attachment, when the feeding main is surface-mounted and the cable diameter is more than 6 mm.
- There must be at least 50 cm below and at least 2 cm of free space to the sides of the detector, so that the detector can be extracted or tested with the detector exchanger and tester.
- Contorted detector bases complicate or even impede the insertion of the detectors with the detector exchanger.

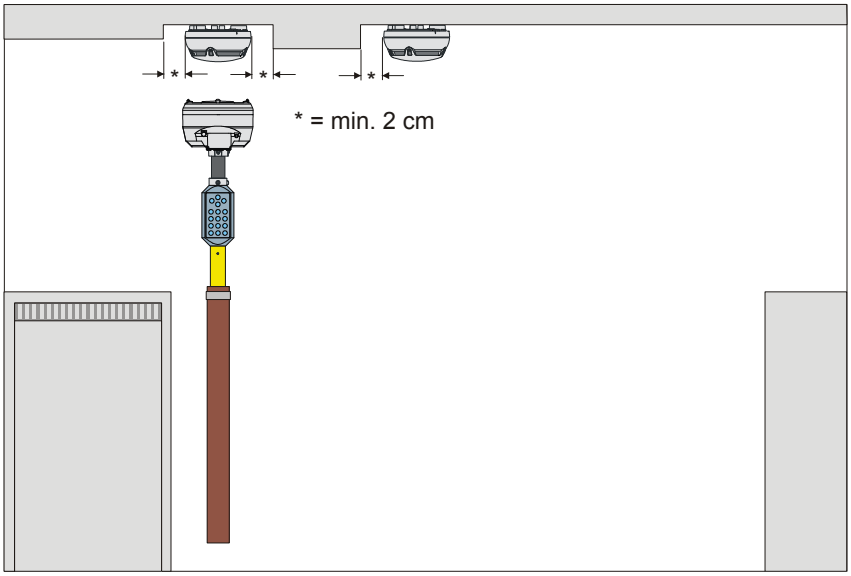

Minimum spacing when installing detector bases

5.2 Addressable detector base FDB221

- The cables are routed surface-mounted (up to cable diameter 6 mm) or recess-mounted through detector base FDB221 or FDB221-AA.
- The cables must be placed flat on the bottom of the detector base so that they do not hamper detector insertion.

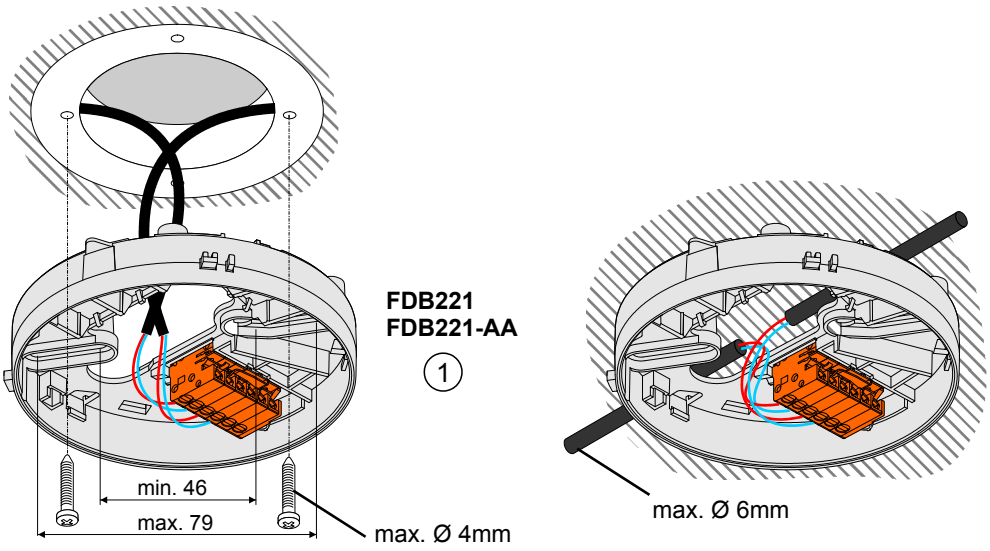

Installation of detector base FDB221/FDB221-AA

1 Detector base

5.3 Flat detector base FDB222

- The cables are routed recess-mounted through detector base FDB222.
- The cables must be placed flat on the bottom of the detector base so that they do not hamper detector insertion.

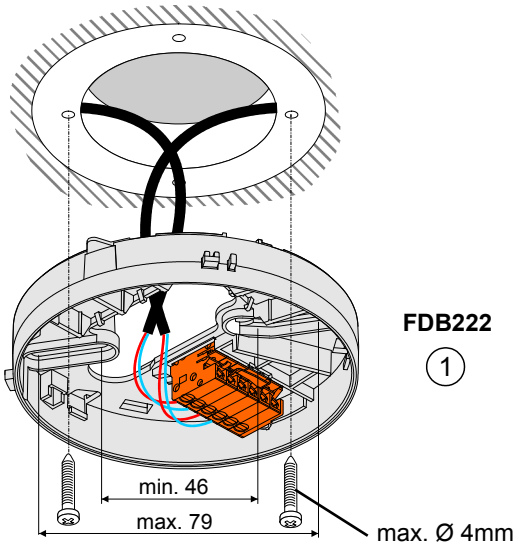

Installation of detector base FDB222

1 Detector base

5.4 Base attachment FDB291

- When the cable diameter is more than 6 mm, the base attachment FDB291 must be used.
- The required cable entries must be broken out on the base attachment.

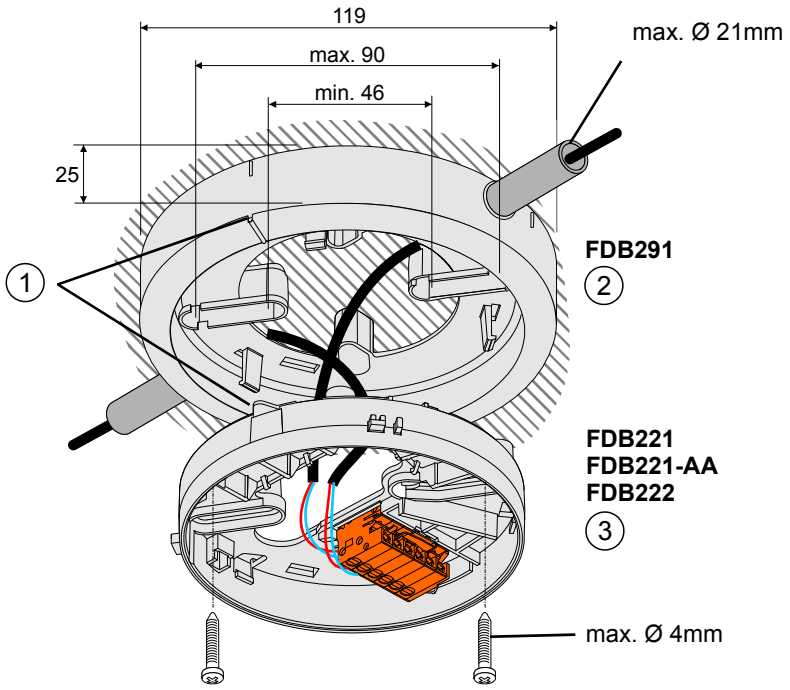

Installation of detector base on base attachment FDB291

1 Identification
2 Base attachment
3 Detector base

5.5 Base attachment humid FDB293

- For the installation of detectors in wet rooms, the base attachment humid FDB293 is used.
- To seal the cables, especially tight cable glands are used.

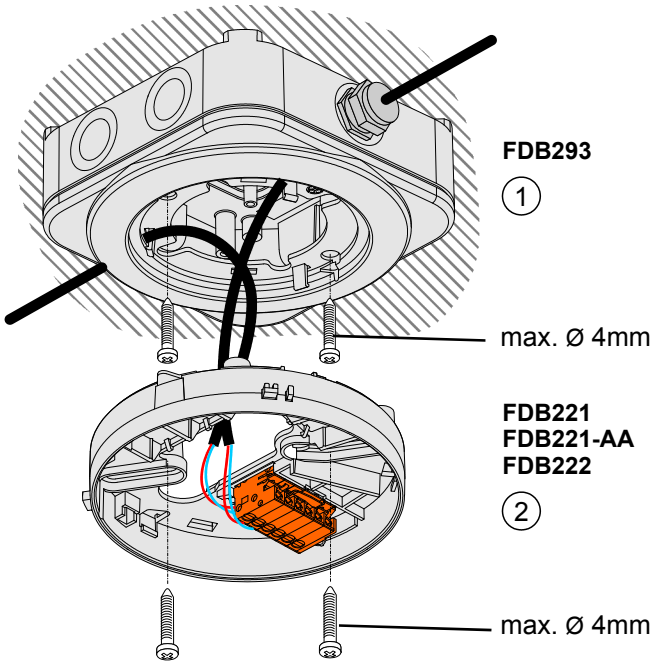

Installation of detector base on base attachment humid FDB293

1 Base attachment humid

2 Detector base

5.6 Detector locking device FDBZ293

The detector can be protected against theft with the detector locking device FDBZ293.

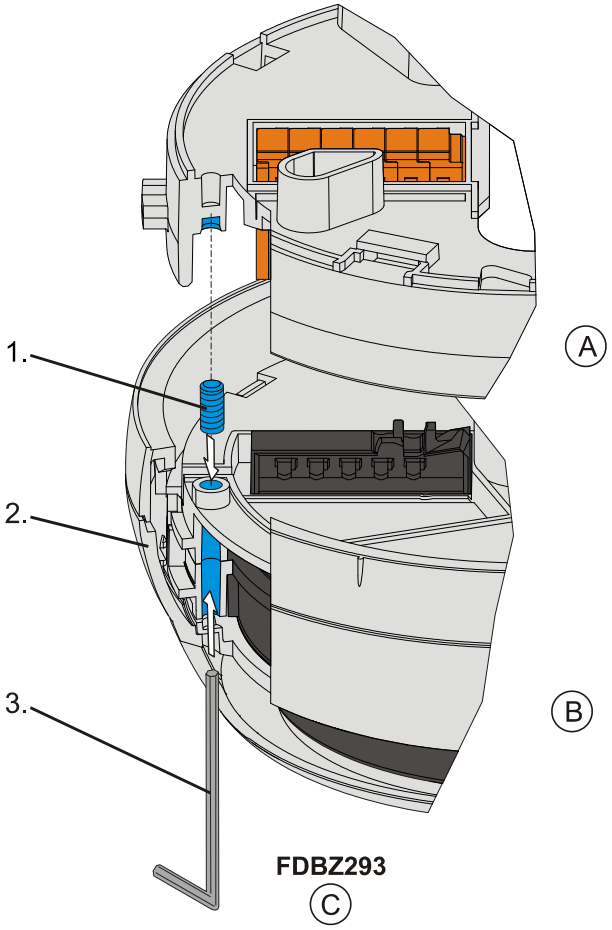

Installation of detector locking device FDBZ293

A Detector base
B Detector
C Detector locking device

1. Place the grub screw with a hexagon socket screw in the detector.
2. Insert the detector in the detector base.
3. Using the socket head wrench provided, insert the grub screw through the hole in the detector housing and tighten.

⇨ The detector can no longer be removed from the base without tools.

5.7 Designation plate FDBZ291

To provide the detector with a location address, the address is inscribed on the designation plate FDBZ291 and placed on the detector base or base attachment.

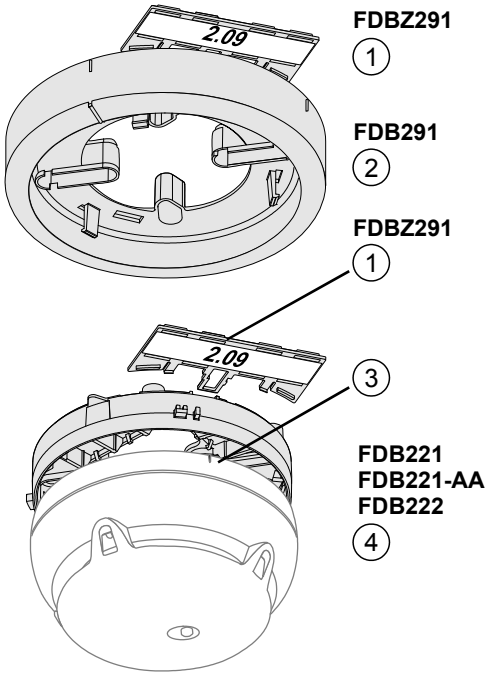

Installation of designation plate FDBZ291

1 Designation plate
2 Base attachment
3 Identification
4 Detector base

5.8 Designation plate DBZ1193A

To identify a detector on a base attachment humid, the detector designation plate DBZ1193A is labelled and placed on the detector base humid FDB293.

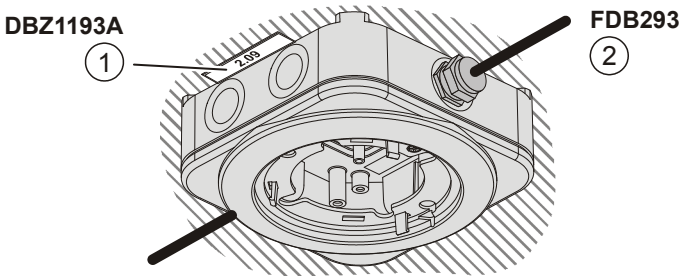

Installation of designation plate DBZ1193A

1 Designation plate DBZ1193A
2 Base attachment humid FDB293

5.9 Detector heating unit FDBH291

5.9.1 Installation of the detector heating unit

When the detector is exposed to icing or moisture condensation (e.g. in cooling rooms, attics, loading ramps) the detector heating unit FDBH291 is installed in the base. The detector heating unit increases the detector temperature by approximately 2 °C over the ambient temperature and thus avoids moisture condensation on the detector.

To ensure IP protection, the base is always mounted together with the base attachment humid FDB293.

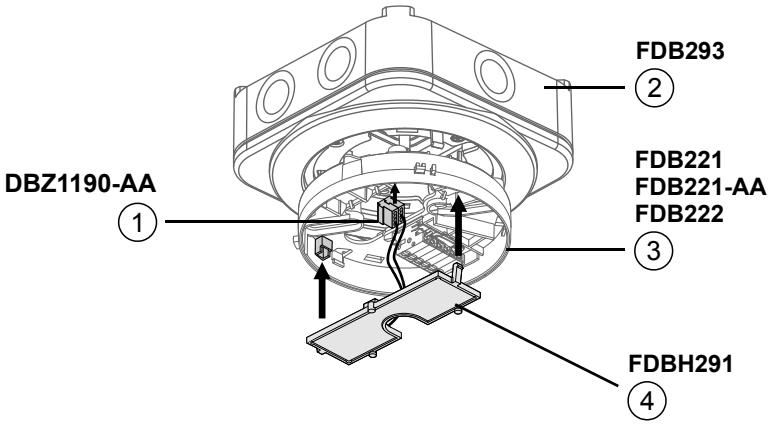

Installation of the detector heating unit FDBH291

1 Micro terminals
2 Base attachment humid
3 Detector base
4 Detector heating unit

See also

Base attachment humid FDB293 [→ 61]

5.9.2 Connection of the detector heating unit

- Connect the cables for the monitored supply from the control panel and the detector heating unit to the supplied micro terminals DBZ1190-AA.
- The cables can be placed in the same cable harness as the detector line or separately.
- Several detector heating units can be connected in parallel.
- Detector heating units require a separate supply.

⚠ WARNING

Openings on detector housing at risk of clogging by snow and ice

This prevents quick and correct detection of a danger status

- Check the openings on the housing of the detectors affected on a regular basis.
- Remove snow and ice immediately from the openings on the housing.

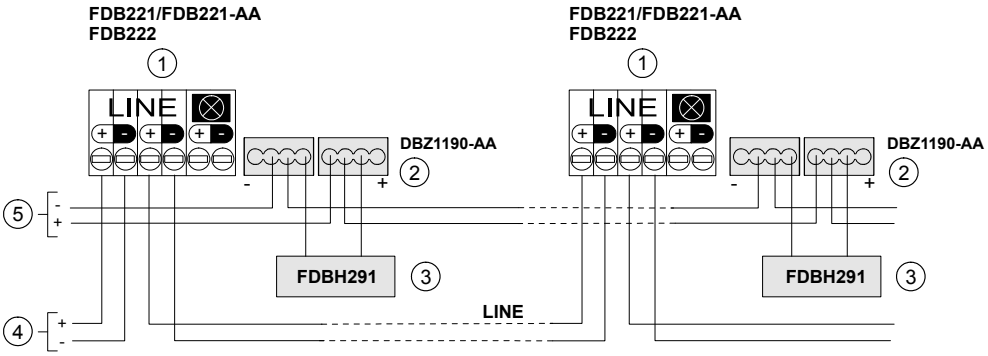

Connection diagram for detector heating unit FDBH291

1 Detector base
2 Micro terminals
3 Detector heating unit
4 Control panel
5 Control panel supply (monitored)

5.10 Protective cages

Protective cage DBZ1194 protects the detector against mechanical damage.

EMC-protective cage FDBZ294 protects the detector against mechanical damage and electromagnetic fields.

See also

Protective cage DBZ1194 [→ 38]
EMC-protective cage FDBZ294 [→ 38]

5.10.1 Installation of the protective cages

The protective cages can only be installed on the base attachment humid FDB293.

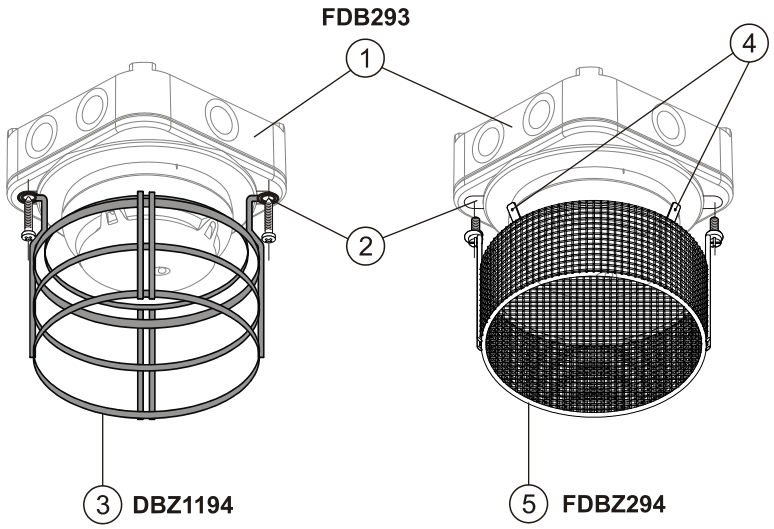

Installation of the protective cages

1 Base attachment humid
2 Break out and screw protective cage on firmly
3 Protective cage
4 Flat plug 6.3 x 0.8 mm
5 EMC-protective cage

See also

Base attachment humid FDB293 [→ 35]

5.10.2 Grounding of the EMC-protective cage FDBZ294

The EMC-protective cage must be connected to the shielding of the detector line cable at the flat plug.

If the detector line cable is not shielded then the EMC-protective cage must be grounded using a separate cable.

For optimum grounding in the presence of powerful electromagnetic fields, the ground line must be shorter than 10 m and have a cross section of at least 1.5 mm^2.

See also

Installation of the protective cages [→ 66]

5.11 Cable entry

The detector bases include a spring clip (admissible wire/strand cross-section 0.28... 1.5 mm²). Only one wire is allowed to be connected per terminal. This is the only way in which a faultless connection can be guaranteed.

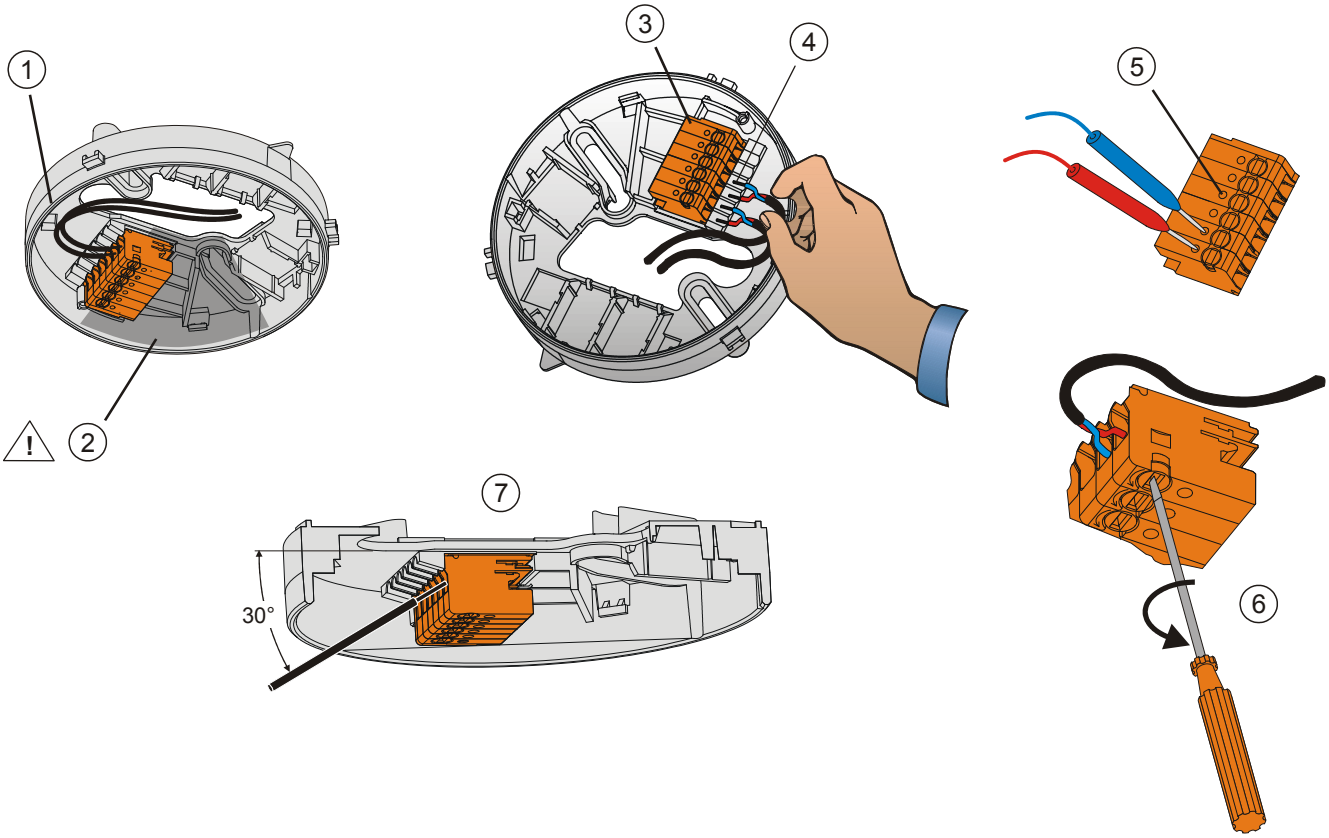

Cable entry in detector base

1 The conductor loops must be placed flat in the base bottom.

2 The conductor loops must not be placed over this zone, as otherwise the detector cannot be inserted correctly.

3 Screwless connection terminals

4 Bare length 6.5 ... 7.5 mm

5 Contact for test tips

6 Turn the screwdriver 90° in the direction of the arrow (left) to only loosen the conductors and insert the strand.

7 Optimum insertion of the wire without tool, at an angle of approx. 30°

5.11.1 Auxiliary terminals DBZ1190-AA/-AB

Corresponding auxiliary terminals are available for multiple connections:

- DBZ1190-AB connection terminal 1 … 2.5 mm²
- DBZ1190-AA micro terminal 0.28 … 0.5 mm²

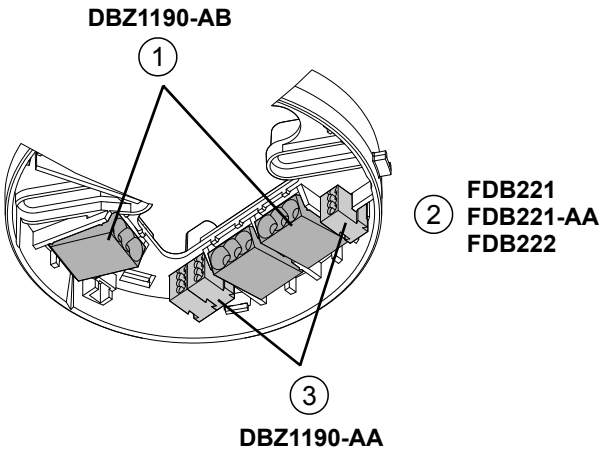

Installation of auxiliary terminals in detector base

1 Connection terminals DBZ1190-AB
2 Detector base
3 Micro terminals DBZ1190-AA

5.12 Detector lines

5.12.1 Connection diagram

5.12.1.1 Use of unshielded cables

Guideline

- The connection is established from base to base using twisted or non-twisted wire pairs.
- Preferably, twisted and non-shielded cables should be used.
- Loop lines and stub lines as well as T-branches are possible.

Notes

- In an addressed detector line, an external alarm indicator may be connected to only one detector.
- Unshielded cables are recommended for the connection of the external alarm indicator.

5.12.1.2 Use of shielded cables

The shielding of the FDnet line must be connected in the detector base with auxiliary terminals DBZ1190-xx.

Unshielded cables are recommended in principle for the connection of external alarm indicators.

Two connection variants A or B are possible if a shielded cable is used:

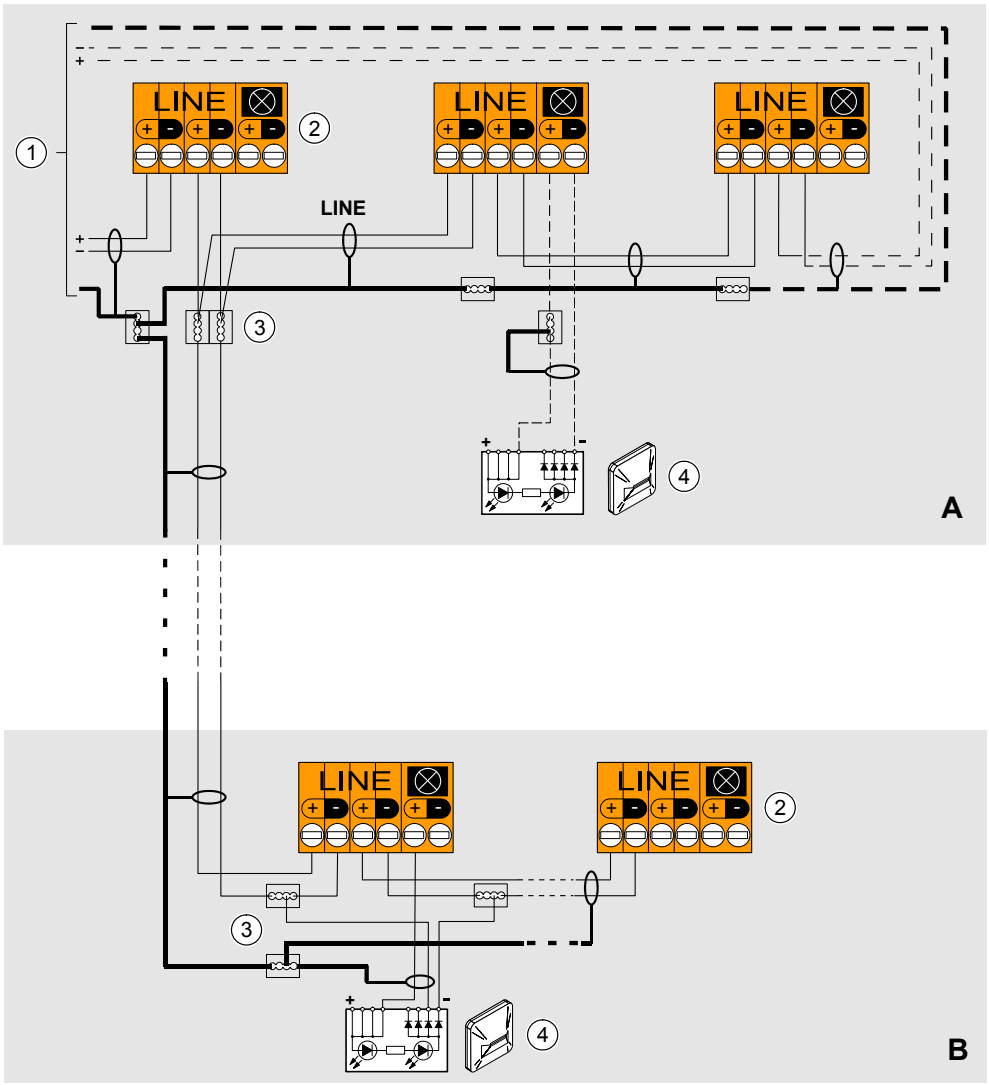

1 Control panel

2 Detector base FDB221/FDB221-AA, FDB222

3 Auxiliary terminals DBZ1190-AA/DBZ1190-AB

4 External alarm indicator DJ119x

Variant A:

1. Connect the positive pole of the alarm indicator to the positive pole for the alarm indicator on the detector.
2. Connect the negative pole of the alarm indicator to the negative pole for the alarm indicator on the detector.
3. Connect the shielding of the connection cable between the alarm indicator and detector on the detector side to the positive pole of the alarm indicator with an auxiliary terminal DBZ1190-xx.

Variant B:

1. Connect the positive pole of the alarm indicator to the positive pole for the alarm indicator on the detector.
2. Leave the negative pole for the alarm indicator on the detector unoccupied.
3. Connect each of the two negative poles of the alarm indicator separately to both negative terminals of the FDnet line.
4. Connect the shielding of the FDnet line with the shielding of the connection cable to the alarm indicator with an auxiliary terminal DBZ1190-xx.

The two negative connections of the alarm indicator are decoupled internally in the alarm indicator by diodes.

5.13 Detector dust cap FDZ291

During the construction phase the detector may be covered with a detector dust cap FDZ291 to protect it from dust and dirt.

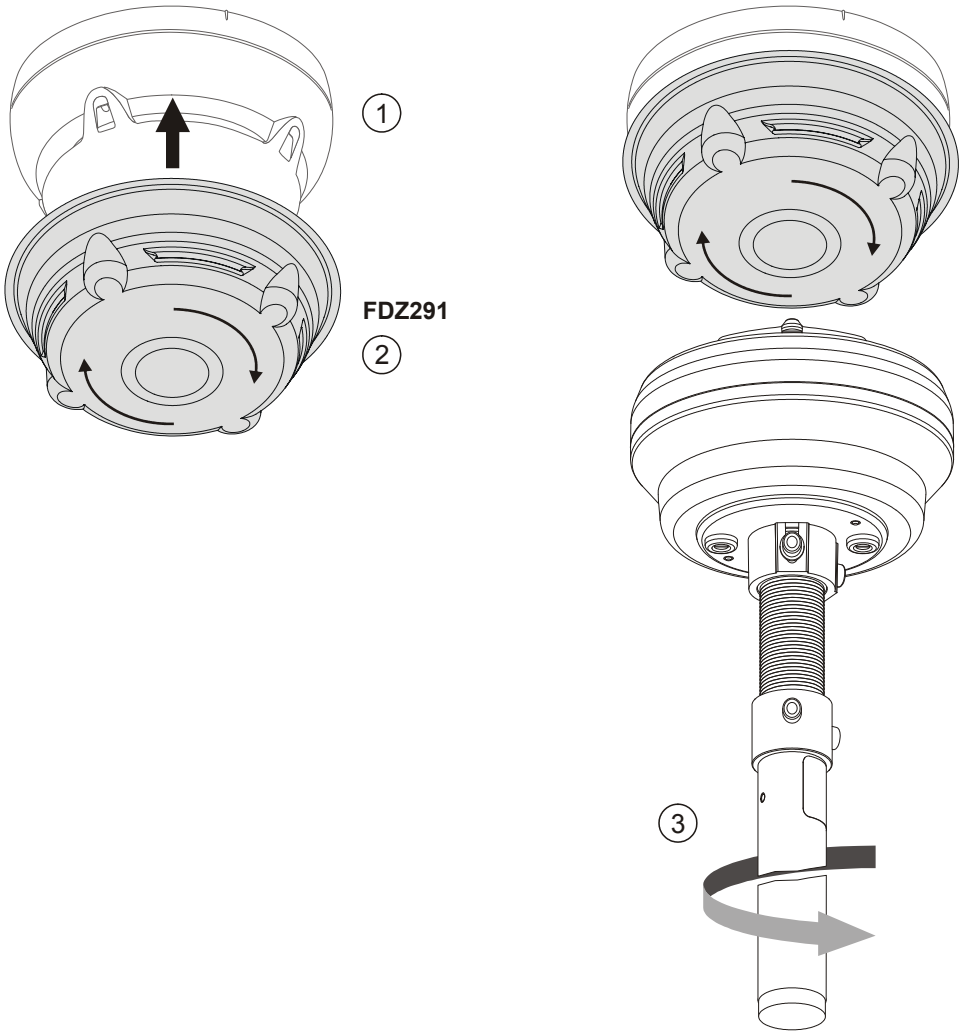

Installation / removal of detector dust cap FDZ291

1 Detector

2 Detector dust cap

3 Remove the detector dust cap either manually by turning it to the right, or by using a detector exchanger and tester.

6 Commissioning

The device is commissioned via the control panel. The exact procedure is described in the control panel documentation.

Conduct a performance check once commissioning is complete.

See also

- Performance check [→ 74]
- Testing the fire detection functionality [→ 75]
- Testing the functionality of the 'Technical CO Alarm' [→ 76]
- Testing the functionality of the 'Technical Ambient Supervision Alarm' [→ 76]

6.1 'Technical Ambient Supervision Alarm' performance check

You cannot test whether the 'Technical Ambient Supervision Alarm' is functioning correctly with test devices.

Checking can only take place indirectly:

▷ You must know the current ambient temperature.

- Enter the following parameters on the configuration tool:
  - A hysteresis range of 5 °C
  - A temperature threshold that is at least 5 °C below the current ambient temperature.
  - Alarming when the threshold value is undershot
  - ⇨ The detector sends a signal to the control panel

⇨ The 'Technical Ambient Supervision Alarm' is working correctly if the control panel displays an alarm.

7 Maintenance / Repair

7.1 Status polling with the detector exchanger and tester

All point detectors are equipped with the MC link (Maintenance and Commissioning Link).

Using this interface, it is possible to read out data from the device in a proximity method over short distances with the detector exchanger and tester FDUD292 or the intelligent detector tester FDUD293.

For details, see Documents 007227 and 009718.

Depending on the authorization level of the user and the control panel type, the following actions can be performed:

- Device test (Go / No Go or detailed by status polling)
- Activation of a test alarm
- Reading out the identification number, customer text and measure text
- Localization and parameter setting of the detector (parameter setting not in FDnet mode)
- Switching off the detector
- Resetting the control panel

7.2 Performance check

The selftest automatically subjects the detectors to an extensive electrical performance check. Regular performance checks of the detectors are required nonetheless. This may be done with the detector exchanger and tester, test gases or by the hot air fan.

Recommendation:

- Subject all detectors to an annual visual check. Detectors that are heavily soiled or mechanically damaged must be replaced.
- The CO sensor used in the FDOOTC241 has a maximum service life of 5 years. When CO-supported parameter sets are activated, a critical warning is triggered once this period has lapsed.

  It can continue to be used as a FDOOT fire detector depending on the fire control panel following reconfiguration to non-CO-supported parameter sets until the recommended replacement period of 6 to 8 years is reached.

7.3 Testing detectors

Depending on the detector, testing may be performed with one or more of the following accessories:

- Detector exchanger and tester FDUD292 or intelligent detector tester FDUD293 (recommended)
- Test gas, optical
  - REF 8-S (recommended)
  - REF 8
- CO test gas
  - REF 8-C (for CO sensor)
- Hot air fan

7.3.1 Testing the fire detection functionality

The following table shows the accessories with which the FDOOTC241 can be tested in the various sensor modes.

Fire detector FDOOTC241	Detector exchanger and tester	Test gas		Hot air fan
		Optical	CO	
Sensor mode 0 (neural fire detector)	X	X	X	X
Sensor mode 1 (heat detector)	X	–	–	X
Sensor mode 2 (smoke detector)	X	X	–	–

If detector FDOOTC241 is in test mode, the following must be noted:

In test mode, the detector responds according to the parameter set selected. This means when the neural fire detector is operated as a heat detector (sensor mode 1), it must be thermally checked as well.

Selecting the test mode on the fire control panel does not deactivate evaluation of the 'Technical CO Alarm' and 'Technical Ambient Supervision Alarm' functionalities.

If the detector is in alarm status, the internal alarm indicator flashes brightly every second.

7.3.2 Testing the functionality of the 'Technical CO Alarm'

The following table shows the accessories with which the FDOOTC241 can be tested in sensor mode 0.

Fire detector FDOOTC241	Detector exchanger and tester	Test gas		Hot air fan
		Optical	CO	
Sensor mode 0 (Technical CO Alarm)	X	–	X	–

If detector FDOOTC241 is in test mode, the following must be noted:

Because the fire detection functionality is not automatically deactivated during test mode for CO, the documentation provided for the control panel must be consulted for details of how to proceed (for FS20 control panels as of MP2.1).

Deactivating the 'Technical CO Alarm' on the fire control panel does not deactivate the fire detection functionality and the 'Technical Ambient Supervision Alarm'.
If you are using CO test gases which haven't been approved, a fire alarm may be activated during testing if additional setting of test mode is not undertaken on the fire control panel.

If the detector is in alarm status, the internal alarm indicator flashes brightly every second.

7.3.3 Testing the functionality of the 'Technical Ambient Supervision Alarm'

You do not have to check the functionality of the 'Technical Ambient Supervision Alarm' on a regular basis.

Testing the fire detection functionality and the Technical CO Alarm ensures that the 'Technical Ambient Supervision Alarm' also works.

See also

- Testing the fire detection functionality [→ 75]
- Testing the functionality of the 'Technical CO Alarm' [→ 76]
- 'Technical Ambient Supervision Alarm' performance check [→ 73]

7.3.4 Testing detectors with detector exchanger and tester

The easiest way to test the detectors is using detector exchanger and tester FDUD292 and intelligent detector tester FDUD293. With these devices, the detectors can also be tested in operating mode without any problems.

A detector can be put into test mode with the detector exchanger and tester FDUD292 or the intelligent detector tester FDUD293.

For details, see Documents 007227 and 009718.

Selecting the test mode on the detector exchanger and tester does not deactivate evaluation of the Technical CO Alarm!

7.3.5 Testing detectors without detector exchanger and tester

The fire detectors are highly resistant to deceptive phenomena. Optical fire detectors thus recognize the immediate occurrence of smoke, as typically occurs when testing with test gas, as a deceptive phenomenon and do not trigger an alarm. This is desirable in normal operation; however, it does make testing with test gas problematical.

To enable detector testing with test gas or with a hot air fan, the detector must be switched to test mode.

The detector or detector zones can be switched to test mode on the control panel. Testing with test gas is then possible without problems.

To trigger a detector with test gas, normally 2 … 4 gas discharges at intervals of approx. 2 seconds are required. When the detector is in test mode, activation takes place after approximately 10 seconds.

8 Specifications

Unless otherwise mentioned, the following data applies:

Temperature	= 25°C
Air pressure	= 1000 hPa (750 Torr)

8.1 Technical data

Detector line	Operating voltage (modulated)	12 … 33 V DC
	Operating current (quiescent)	Typ. 320 … 400 µA
	Maximum current connection factor	2
	Quiescent current connection factor	2
	Address connection factor	1
	Separator connector factor	1
	Protocol	FDnet
	Compatibility	See 'List of compatibility'
Line separator	Line voltage:	
	• Nominal	32 VDC (= V_{nom})
	• Minimum	12 VDC (= V_{min})
	• Maximum	33 VDC (= V_{max})
	Voltage at which the separator opens:	
	• Minimum	7.5 VDC (= $V_{SO\ min}$)
	• Maximum	10.5 V DC (= $V_{SO\ max}$)
	Permanent current when switches are closed:	Max. 0.5 A (= $I_{C\ max}$)
	Switching current (e.g. in the event of a short-circuit):	Max. 1 A (= $I_{S\ max}$)
	Leakage current when switches are open:	Max. 1 mA (= $I_{L\ max}$)
	Serial impedance when switches are closed:	Max. 0.5 Ω (= $Z_{C\ max}$)
External alarm indicator	External alarm indicators which can be connected	2 external alarm indicators and 1 sounder base
	Voltage	10 … 33 V DC
	Power	9 … 15 mA
	Length of line	• Max. 30 m with unshielded cables, or when the shielding is connected to the detector base's positive pole • Max. 5 m, if the shielding is connected to earth
	Flashing interval times:	
	• Bright	15 ms
	• Dark	1 s

Device characteristics	Response sensitivity (typ.)	3 … 12 %/m (depending on the parameter set)
	● Permissible wind speed	Max. 20 m/s
	● Compensation speed	≤ 1/45 voltage increase for detection/h
	● Detector diagnosis	With detector exchanger and tester FDUD292 or intelligent detector tester FDUD293
	CO sensor service life	Max. 5 years
Ambient conditions	Permitted ambient temperature	-20 … +50 ℃
	Storage temperature	-20 … +55 °C
	Optimum storage temperature	0 … +20 °C
	Air humidity	15 …90 % rel.
	Protection categories according to EN 60529/IEC 60529:	
	● Base FDB221/FDB222	IP43
	● Base attachment FDB291 with base FDB221/FDB222	IP43
	● Base attachment humid FDB293 with base FDB221/FDB222 and FDOOTC241	IP44
	● Sounder base FDSB29x	IP43
	Electromagnetic compatibility:	
	● 1 MHz … 2 GHz	30 V/m
Mechanical data	Dimensions (Ø x H):	100 x 47 mm
	Weight	0.106 kg
	Colour	~RAL 9010 pure white
Standards	Standards	CEA 4021 EN 54-7, EN 54-17, EN 54-5 VdS 2806
	VdS approvals	G209040
	LPCB approvals	Pending
	FM approvals	Pending
	Certificates	0786-CPD-20694
	CE conformity mark	Yes
	QA Standards	Siemens Standard SN 36350 ISO 9001, ISO 9004

8.2 Dimensions

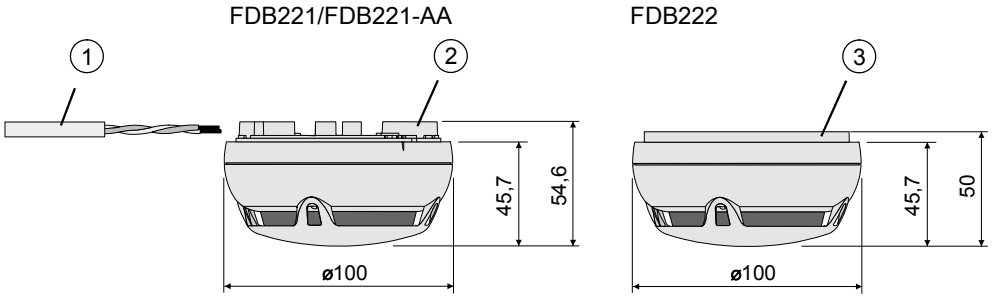

Dimensions of FDOOTC241 with detector bases FDB221/FDB221-AA and FDB222

1 Suitable for surface-mounted cables up to Ø 6 mm.

2 Detector base at a distance

3 Detector base directly attached to the mounting surface

8.3 Environmental compatibility

- Environmentally friendly detector-testing without gas
- Reusable materials
- Electronic parts and synthetic materials can be easily separated
- Halogen-free synthetic materials, marked by embossed code
- The synthetic materials used do not generate any toxic substances during combustion.

The larger plastic parts are labeled according to ISO 11469. The basic polymer abbreviations comply with ISO 1043. The materials can be separated and recycled on this basis.

9 Index

A

Alarm indicator

Indication of operating condition, 29

Ambient supervision, 17

Application as heat detector

Sensor mode 1, 25

Application as neural fire detector

Sensor mode 0, 25

Application as smoke detector

Sensor mode 2, 25

ASAtechnology

S-LINE, 18

C

Carbon monoxide

CO, 17

CO

Carbon monoxide, 17

CO concentration, 22, 25, 55

Average, 55

CO sensor

Detection of carbon monoxide, 23

Compatibility, 33

Control panel, 73

D

Danger level

Signal processing of the detector, 26

Default parameter set 0

Delivery, 46

Degraded mode operation

Failure of fire control panel, 31

Delivery

Default parameter set 0, 46

Detection behavior of the detector

Parameter set, 25, 26

Detection of carbon monoxide

CO sensor, 23

Detector base FDB221

Surface-mounted or recess-mounted feed line, 58

Detector base FDB222

Recess-mounted feed line, 59

Detector exchanger and tester

Test device, 30

Detector exchanger and tester FDUD292

MC link, 32, 74

Diagnosis levels

Information displayed on the detector exchanger and tester, 28

F

Failure of fire control panel

Degraded mode operation, 31

H

Hot air fan

Test device, 30

Hysteresis, 22, 25

Hysteresis range, 25, 53, 55

I

Indication of operating condition

Alarm indicator, 29

Information displayed on the detector exchanger and tester

Diagnosis levels, 28

Intelligent detector tester FDUD293

MC link, 32, 74

Interface

MC link, 74

L

Line separator, 29

List of compatibility, 9, 31, 33, 78

M

Major renovation work

Renovation mode, 29

MC link, 74

Detector exchanger and tester FDUD292, 32, 74

Intelligent detector tester FDUD293, 32, 74

Proximity interface, 32

P

Parameter set

Detection behavior of the detector, 25, 26

Proximity interface

MC link, 32

R

Recess-mounted feed line

Detector base FDB222, 59

Renovation mode

major renovation work, 29

S

Sensor mode 0

Application as neural fire detector, 25

Sensor mode 1

Application as heat detector, 25

Sensor mode 2

Application as smoke detector, 25

Signal processing of the detector

Danger level, 26

Warning level, 27

S-LINE

ASAtechnology, 18

Standards, 79

Surface-mounted or recess-mounted feed line

Detector base FDB221, 58

T

Temperature exceeded, 54

Temperature increase, 22, 25

Temperature undershot, 54

Test device

Detector exchanger and tester, 30

Hot air fan, 30

Test gases REF 8, REF 8-S and REF 8-C, 30

Test gases REF 8, REF 8-S and REF 8-C

Test device, 30

Threshold value, 54, 55

W

Warning level

Signal processing of the detector, 27

Issued by
Siemens Switzerland Ltd
Industry Sector
Building Technologies Division
International Headquarters
Gubelstrasse 22
CH-6301 Zug
Tel. +41 41-724 24 24

www.siemens.com/buildingtechnologies

© 2008-2010 Copyright Siemens Industry, Inc.
Technical specifications and availability subject to change without notice.